Print Number: Print Date:

NOBLELIFT

Scan QR Code for More

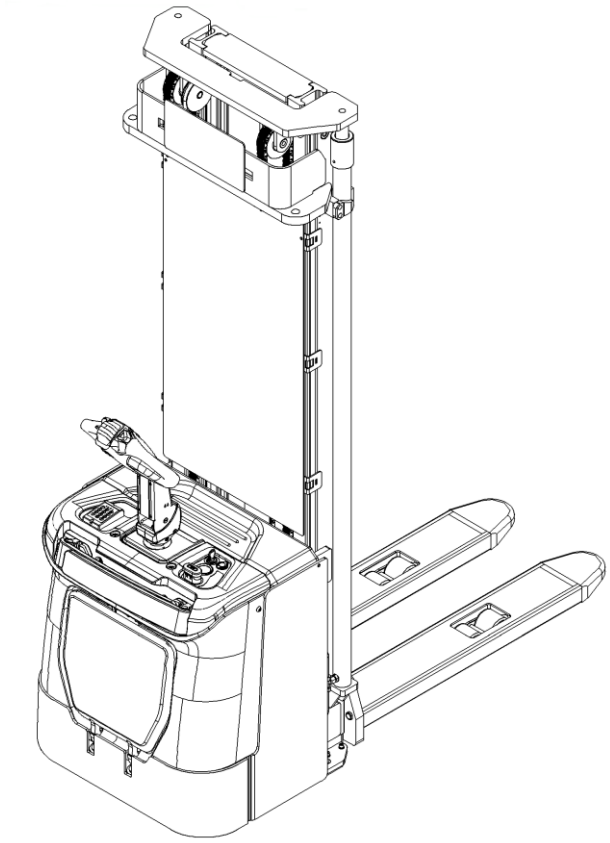

# Electric Pallet Stacker PS16N

## PARTS MANUAL

535946020101

Version V04

Truck Identification Number From:

Parts Manual

PS16N-PM04EN

Please order parts from authorized dealers of Noblelift Intelligent Equipment Co., LTD.

In order to avoid wrong delivery, all the orders for spare parts should specify the following items:

- Truck model, identification number and manufacture year.
- Orders for spare parts of mast, hydraulic transmission unit, steering axle, motor, etc. shall indicate the manufacture number of these parts.
- Codes for Noblelift spare parts are shown in the table of parts manual. Please also pay attention to the description of supply status, order quantity, etc. (check the number listed in "Mark" column of the parts manual).

"Mark" Column:

The unmarked indicates the parts are in short supply cycle.

Number 1: supply as package. Indicating these that parts are small parts and seal parts, which are supplied in package unit and in short supply cycle.

Number 2: supply with constraints. Indicating that these spare parts are not in stock and will be prepared for production after receiving the order from customers, which are in long supply cycle.

Number 3: phasing-out supply. Indicating that these parts will be replaced by new parts due to technical improvements and the current stock will not be available when these parts run out. Please check the description of technical improvements notice.

Number 4: supply as assembly. Indicating that these parts are assembly parts defined by manufacture process, which cannot be supplied as a single part.

Number 5: check other tables.

This parts manual is the property of Noblelift and can be shared under the confidential agreement only, Noblelift has the right to claim for compensation of any unauthorized use. Copy without permission is not allowed. Figures in the manual are not limited by the original design. Noblelift Intelligent Equipment Co., LTD reserves the right to improve the products for continuous technology progress.

# Table of Contents

Chapter 1: Drive System....5
01 Manual Steering Drive Unit (535946013501)....5
02 Drive Unit 1.4kW (535946013502)....7
03 Power steering Drive Unit (535946013503)....11
04 Power steering Drive Unit (EN1175-2020)(535946013506)....13
04 Power steering Drive Unit (EN1175-2020)(535946013506) Continuation....15
05 Drive and Steering Unit 1.4kW (535946013504)....17
Chapter 2: Hydraulic System....19
01 Hydraulic Pipeline (535946024001)....19
02 Pump Unit (HPI,3.2KW) (534746023501)....21
03 Pump Unit (VIBO,3.0KW) (535946023501)....23
04 Pump Unit (VIBO,3.2KW) (534746023502)....25
Chapter 3: Truck Frame....27
01 Chassis (535946021501)....27
01 Chassis (535946021501) Continuation....29
02 Chassis (Sideways Exchange) (535946021502)....31
02 Chassis (Sideways Exchange) (535946021502) Continuation....33
03 Protective Arm (535946017501)....35
04 Platform (535946018001)....37
05 Platform (EPS,EN1175-2020) (535946018002)....39
06 Fork Carriage (534746038001)....41
Chapter 4: Mast System....43
01 Two-stage Mast Standard Lift (535946044001)....43
01 Two-stage Mast Standard Lift (535946044001) Continuation....45
02 Two-stage mast full free lift (535946043501)....47
02 Two-stage Mast Full Free Lift (535946043501) Continuation 1....49
02 Two-stage Mast Full Free Lift (535946043501) Continuation 2....51
03 Triple Mast Standard Lift (535946045001)....53
03 Triple Mast Standard Lift (535946045001) Continuation....55
04 Triple Mast Full Free Lift (535946044501)....57
04 Triple Mast Full Free Lift (535946044501) Continuation 1....59
04 Triple Mast Full Free Lift (535946044501) Continuation 2....61
04 Triple Mast Full Free Lift (535946044501) Continuation 3....63
04 Triple Mast Full Free Lift (535946044501) Continuation 4....65
Chapter 5: Steering System, Braking System, Wheels....67
01 Tiller Unit (535946011001)....67
02 Control Handle (535946011002)....69
03 Control Handle (EN1175-2020)(535946011010)....71
04 Load Wheel (532946017001)....73
05 Caster (534746016501)....75
Chapter 6: Electrical Parts....77
01 Display Assembly (535946010001)....77

02 Display Assembly(EN1175-2020) (535946010003)....79
03 Wire Harness (535946033001)....81
04 Wire Harness (EN175-2020)(535946033011)....83
05 Wire Harness (Power Steering) (535946033002)....85
06 Wire Harness (Power Steering,EN1175-2020) (535946033012)....87
07 Electronic Components (535946033003)....89
08 Electronic Components (EN1175-2020)(535946033013)....91
09 Electronic Components (EPS) (535946033004)....93
10 Electronic Components (EPS,EN1175-2020)(535946033014)....95
11 Charger (535946036501)....97
11 Charger (535946036501) Continuation....99
12 Charger(Li) (535946036502)....101
13 Traction Battery (534746037001)....103
14 Li Battery (535946037002)....105
Chapter 7: Special Parts....107
01 Load Backrest (532646040501)....107
Chapter 8: Others....109
01 Label and Decal (EU) (535946047001)....109
Appendix....111
01 Electrical Circuit Diagram....111
02 Electrical Circuit Diagram (Power Steering)....112
03 Hydraulic Circuit Diagram....114
04 Consumable Parts List....116

# Chapter 1: Drive System

## 01 Manual Steering Drive Unit (535946013501)

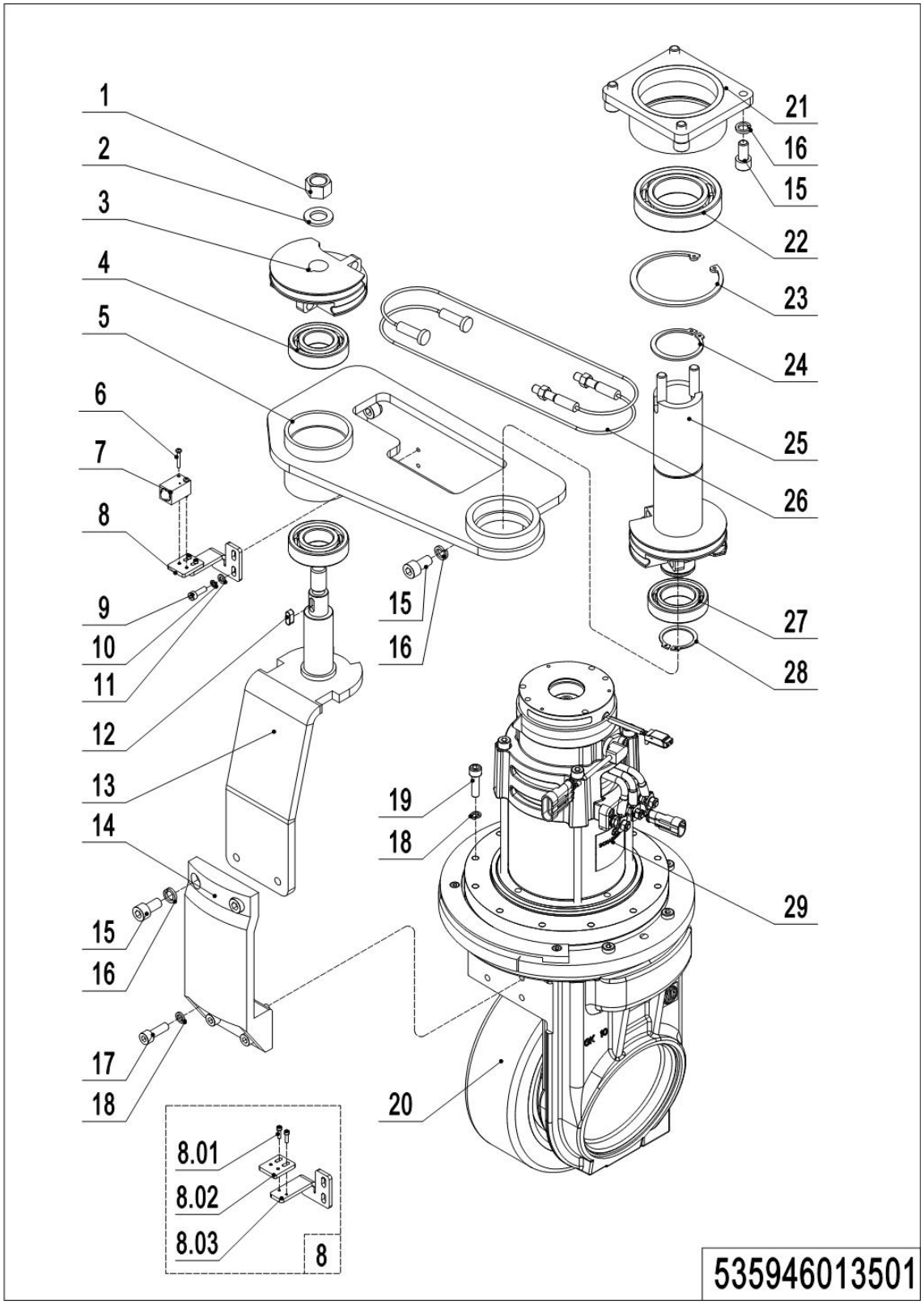

## 01 Manual Steering Drive Unit (535946013501)

| No. | Item Code | Mark | Item Description | Qty. | Substitute | Note |
|---|---|---|---|---|---|---|
| 1 | 910300100010 | 1 | Nut | 1 | | |
| 2 | 910400100010 | 1 | Flat Washer | 1 | | |
| 3 | 535931220002 | | Dial | 1 | | |
| 4 | 910700200021 | | Bearing | 2 | | |
| 5 | 535931210002 | 2 | Bracket | 1 | | |
| 6 | 910200500015 | 1 | Screw | 2 | | |
| 7 | 505633510000 | | Proximity Switch | 1 | | |
| 8 | 535998510022 | | Mounting Plate Kits | 1 | | |
| 8.01 | 910200200003 | | Screw | 2 | | |
| 8.02 | 537813520017 | | Mounting Plate | 1 | | |
| 8.03 | 535931220004 | | Mounting Plate | 1 | | |
| 9 | 910200200023 | 1 | Screw | 6 | | |
| 10 | 910400500004 | 1 | Spring Washer | 6 | | |
| 11 | 910400100004 | 1 | Flat Washer | 4 | | |
| 12 | 910600800011 | | Flat Key | 1 | | |
| 13 | 535931210001 | 2 | Plate | 1 | | |
| 14 | 535931220001 | | Bracket | 1 | | |
| 15 | 910200200075 | 1 | Screw | 10 | | |
| 16 | 910400500007 | 1 | Spring Washer | 10 | | |
| 17 | 910200200058 | 1 | Screw | 4 | | |
| 18 | 910400500006 | 1 | Spring Washer | 17 | | |
| 19 | 910200200060 | 1 | Screw | 9 | | |
| 20 | 940300400005 | | WheelΦ230x70 | 1 | | |
| 21 | 910700200025 | | Bearing | 2 | | |
| 22 | 910401400024 | 1 | Circlip | 2 | | |
| 23 | 535931210004 | 2 | Fixing Base | 1 | | |
| 24 | 910401300024 | 1 | Circlip | 1 | | |
| 25 | 535931210005 | 2 | handle Spindle | 1 | | |
| 26 | 535931210003 | | Wirerope | 2 | | |
| 27 | 910700200007 | | Bearing | 1 | | |

## 01 Manual Steering Drive Unit (535946013501) Continuation

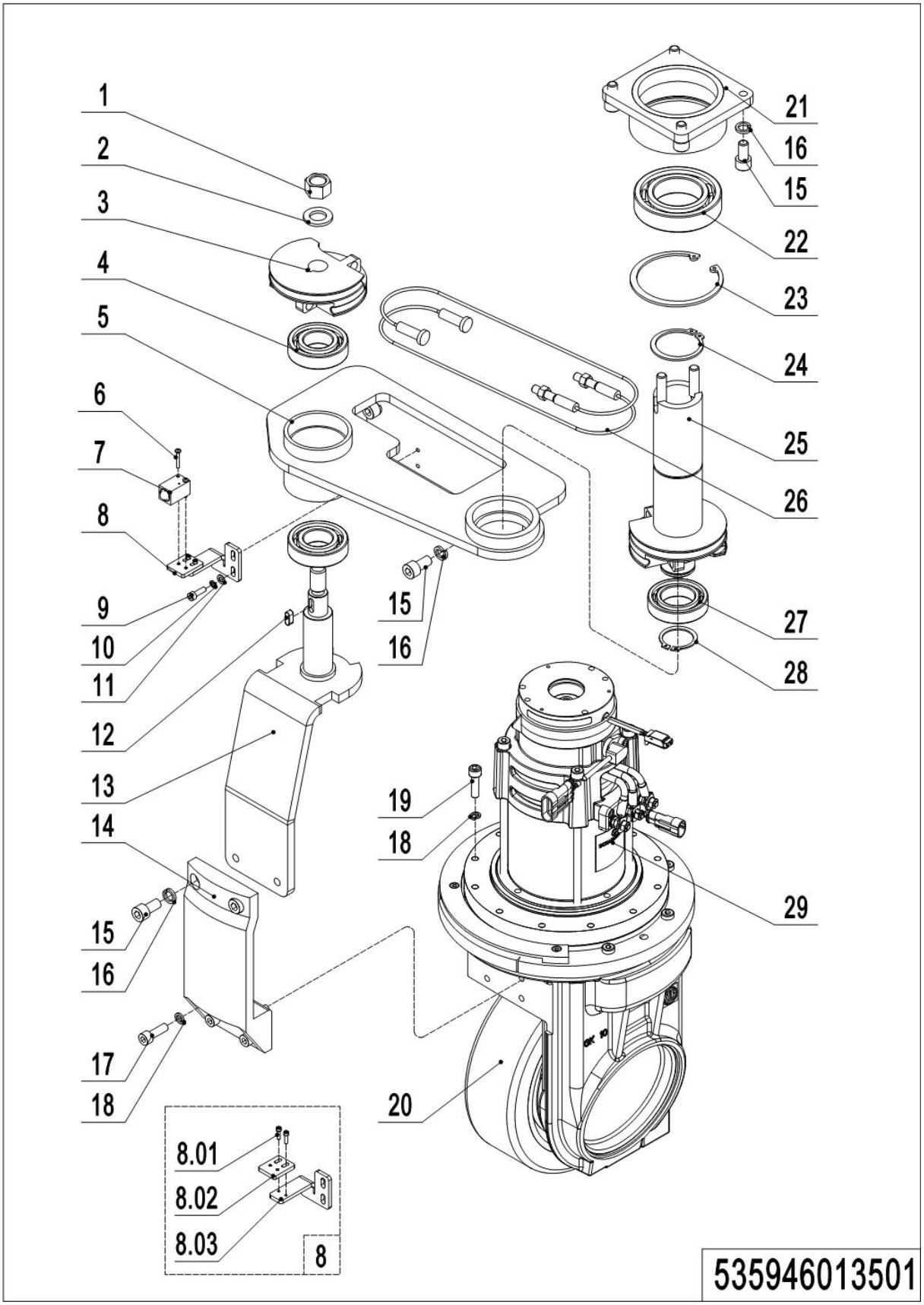

## 01 Manual Steering Drive Unit (535946013501) Continuation

| No. | Item Code | Mark | Item Description | Qty. | Substitute | Note |
|---|---|---|---|---|---|---|
| 28 | 910401300018 | 1 | Circlip | 1 | | |
| 29 | 940900400004 | 5 | Drive Unit | 1 | | **See 535946013502** |

## 02 Drive Unit 1.4kW (535946013502)

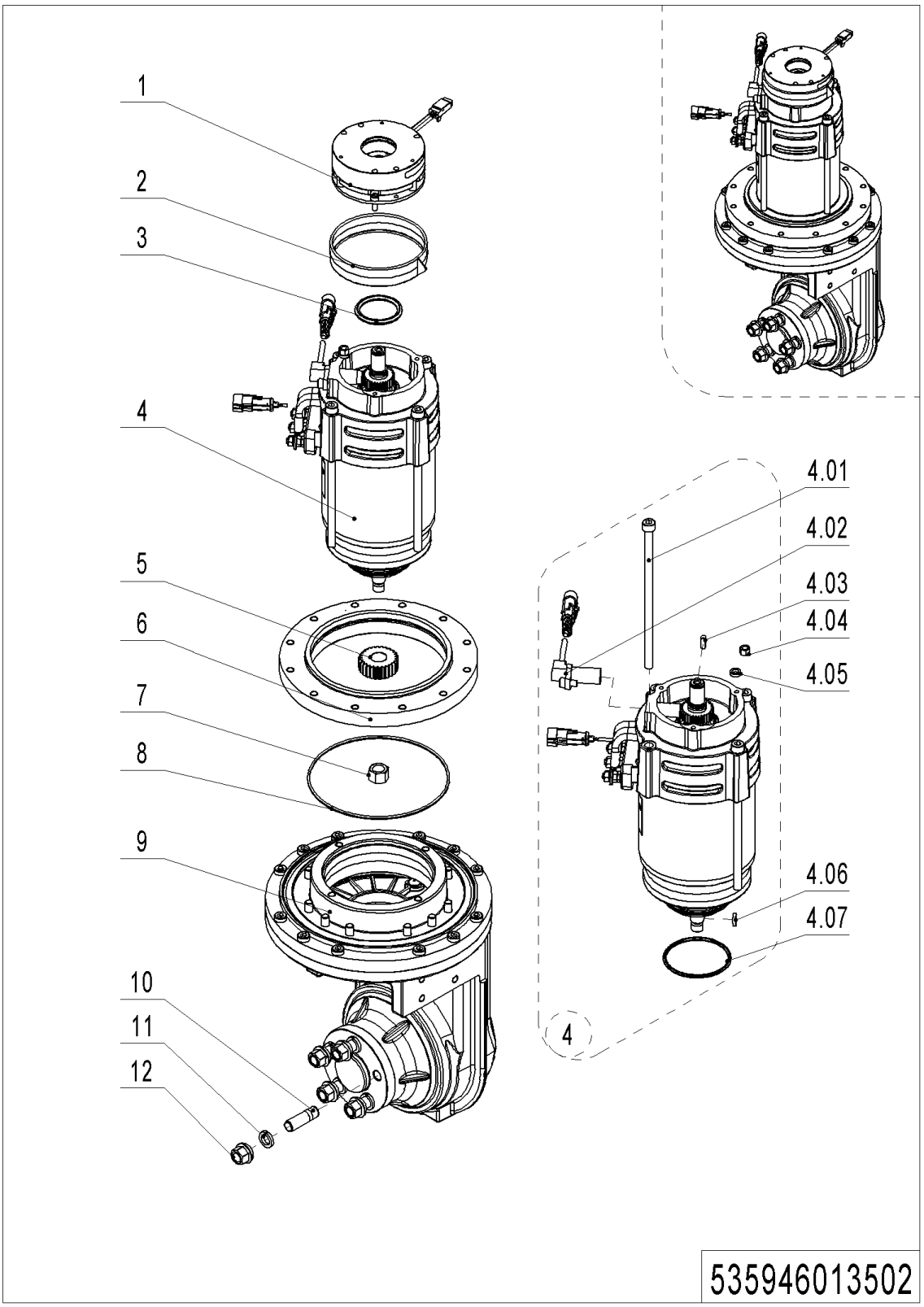

## 02 Drive Unit 1.4kW (535946013502)

| No. | Item Code | Mark | Item Description | Qty. | Substitute | Note |
|---|---|---|---|---|---|---|
| 1 | 535998510001 | | Brake | 1 | | |
| 2 | 535998520001 | | Division Plate | 1 | | |
| 3 | 535998520000 | | Locating Ring | 1 | | |
| 4 | 535998510003 | | Motor | 1 | | |
| 4.01 | 535998520002 | | Screw | 4 | | |
| 4.02 | 535998510002 | | Sensor | 1 | | |
| 4.03 | 535998520005 | | Feather Key | 1 | | |
| 4.04 | 535998520003 | | Nut | 1 | | |
| 4.05 | 535998520004 | | Safety Element | 1 | | |
| 4.06 | 535998520006 | | Key | 1 | | |
| 4.07 | 535998520007 | | O-Ring | 1 | | |
| 5 | 535998520014 | | Gear | 1 | | |
| 6 | 535998520010 | | Plate | 1 | | |
| 7 | 535998520008 | | Nut | 1 | | |
| 8 | 535998520009 | | O-Ring | 1 | | |
| 9 | 535998510004 | | Gearbox Assembly | 1 | | |
| 10 | 535998520011 | | Bolt | 5 | | |
| 11 | 535998520012 | | Washer | 5 | | |
| 12 | 535998520013 | | Nut | 5 | | |

## 03 Power steering Drive Unit (535946013503)

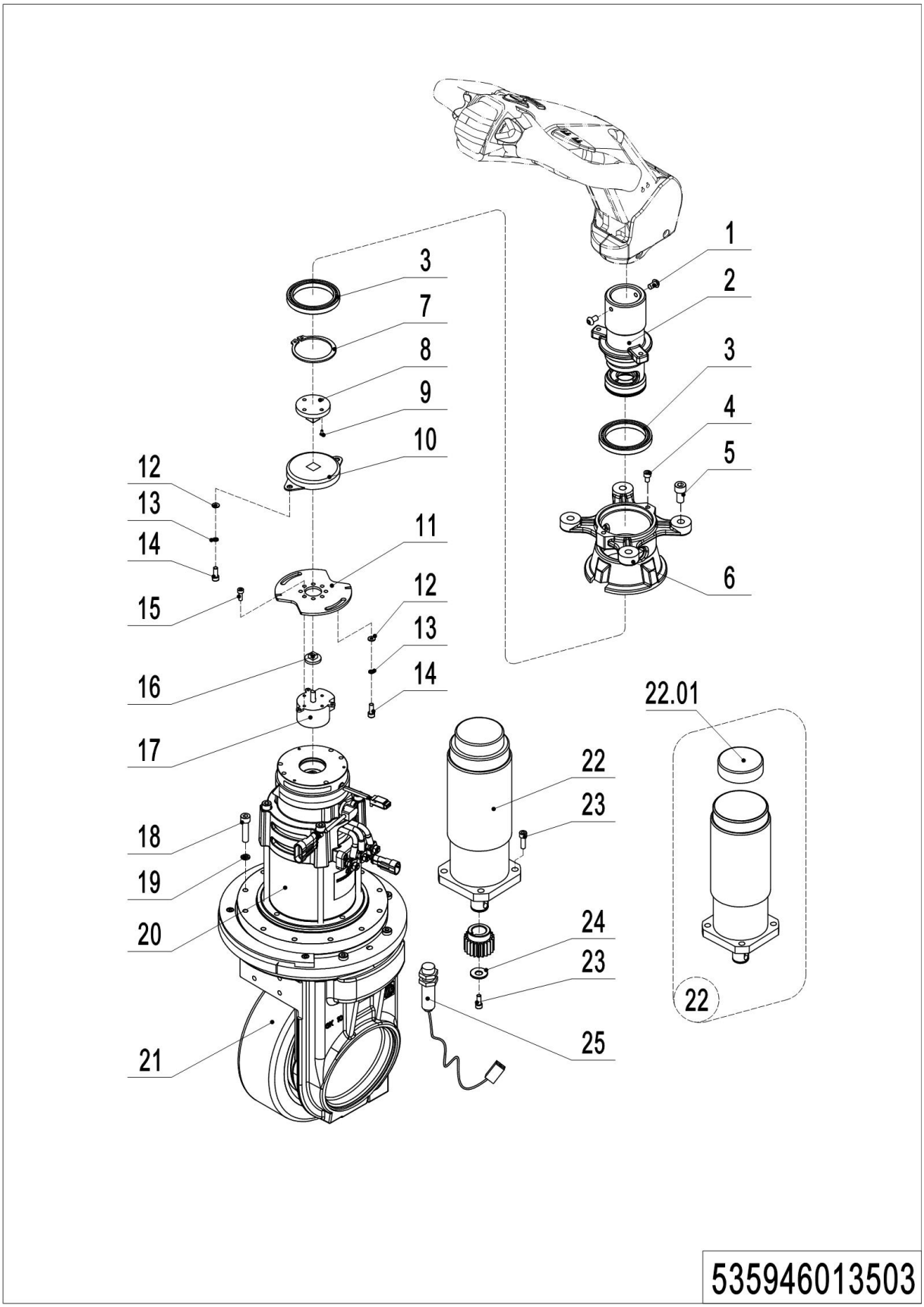

## 03 Power steering Drive Unit (535946013503)

| No. | Item Code | Mark | Item Description | Qty. | Substitute | Note |
|---|---|---|---|---|---|---|
| 1 | 910200300016 | 1 | Screw | 2 | | |
| 2 | 535931520001 | 2 | Bracket | 1 | | |
| 3 | 910700200041 | | Bearing | 2 | | |
| 4 | 910200200032 | 1 | Screw | 3 | | |
| 5 | 910200200075 | 1 | Screw | 4 | | |
| 6 | 505631520002 | | Fixing Base | 1 | | |
| 7 | 910401300024 | 1 | Circlip | 1 | | |
| 8 | 505631520005 | | Link Block | 1 | | |
| 9 | 910200200014 | 1 | Screw | 1 | | |
| 10 | 940801200005 | | Rotary Damper | 1 | | |
| 11 | 535931520002 | | Mounting Plate | 1 | | |
| 12 | 910400100004 | 1 | Flat Washer | 4 | | |
| 13 | 910400500004 | 1 | Spring Washer | 4 | | |
| 14 | 910200200021 | 1 | Screw | 4 | | |
| 15 | 910200200014 | 1 | Screw | 4 | | |
| 16 | 505931520002 | | Link Block | 1 | | |
| 17 | 921800200008 | | Potentiometer | 1 | | |
| 18 | 910200200060 | 1 | Screw | 10 | | |
| 19 | 910400500006 | 1 | Spring Washer | 10 | | **See 535946013504** |
| 20 | 940900500008 | 5 | Steering Unit | 1 | | |
| 21 | 940300400005 | | WheelΦ230x70 | 1 | | |
| 22 | 920900100069 | | Motor | 1 | | |
| 22.01 | 921800200016 | | Encoder | 1 | | |
| 23 | 910200200057 | 1 | Screw | 5 | | |
| 24 | 506713520001 | | Retaining Ring | 1 | | |
| 25 | 505733510001 | | Proximity Switch | 1 | | |

---

**1= Supply as package. 2= Supply with constraints. 3= Phasing-out supply. 4= Supply as assembly. 5= Check other tables.**

## 04 Power steering Drive Unit (EN1175-2020)(535946013506)

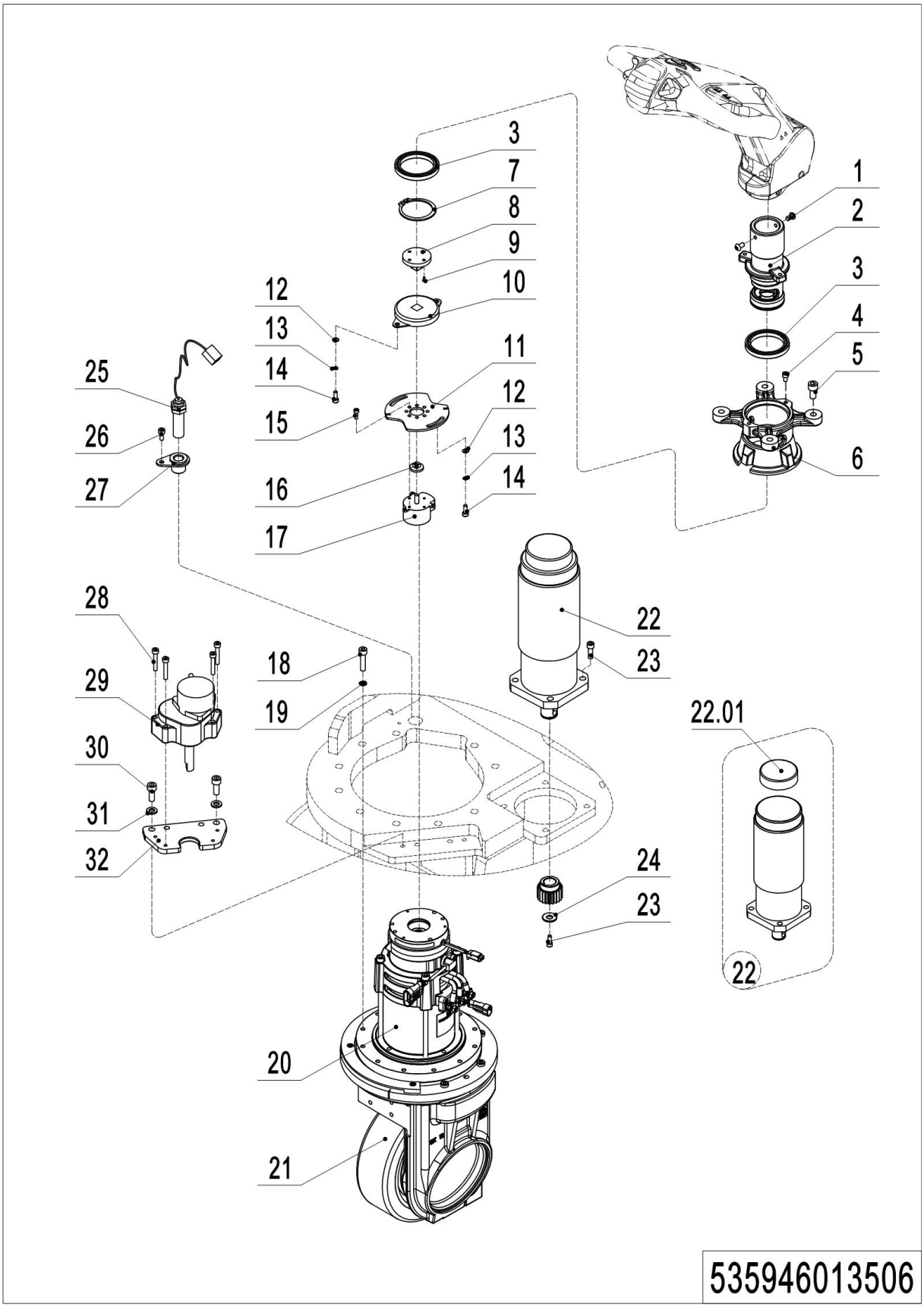

## 04 Power steering Drive Unit(EN1175-2020)(535946013506)

| No. | Item Code | Mark | Item Description | Qty. | Substitute | Note |
|---|---|---|---|---|---|---|
| 1 | 910200300016 | 1 | Screw | 2 | | |
| 2 | 535931520001 | 2 | Bracket | 1 | | |
| 3 | 910700200041 | | Bearing | 2 | | |
| 4 | 910200200032 | 1 | Screw | 3 | | |
| 5 | 910200200075 | 1 | Screw | 4 | | |
| 6 | 505631520002 | | Fixing Base | 1 | | |
| 7 | 910401300024 | 1 | Circlip | 1 | | |
| 8 | 505631520005 | | Link Block | 1 | | |
| 9 | 910200200014 | 1 | Screw | 1 | | |
| 10 | 940801200005 | | Rotary Damper | 1 | | |
| 11 | 535931520002 | | Mounting Plate | 1 | | |
| 12 | 910400100004 | 1 | Flat Washer | 4 | | |
| 13 | 910400500004 | 1 | Spring Washer | 4 | | |
| 14 | 910200200021 | 1 | Screw | 4 | | |
| 15 | 910200200014 | 1 | Screw | 4 | | |
| 16 | 505931520002 | | Link Block | 1 | | |
| 17 | 921800100037 | | Potentiometer | 1 | | |
| 18 | 910200200060 | 1 | Screw | 10 | | |
| 19 | 910400500006 | 1 | Spring Washer | 10 | | |
| 20 | 940900500008 | 5 | Steering Unit | 1 | | **See 535946013504** |
| 21 | 940300400005 | | WheelΦ230x70 | 1 | | |
| 22 | 920900100069 | | Motor | 1 | | |
| 22.01 | 921800200016 | | Encoder | 1 | | |
| 23 | 910200200057 | 1 | Screw | 5 | | |
| 24 | 506713520001 | | Retaining Ring | 1 | | |
| 25 | 562633510001 | | Proximity Switch | 1 | | |
| 26 | 910200200013 | | Screw | 1 | | |
| 27 | 533213510005 | | Bushing | 1 | | |
| 28 | 910200200017 | | Screw | 4 | | |
| 29 | 921800100059 | | Sensor | 1 | | |

---

**1= Supply as package. 2= Supply with constraints. 3= Phasing-out supply. 4= Supply as assembly. 5= Check other tables.**

## 04 Power steering Drive Unit (EN1175-2020)(535946013506) Continuation

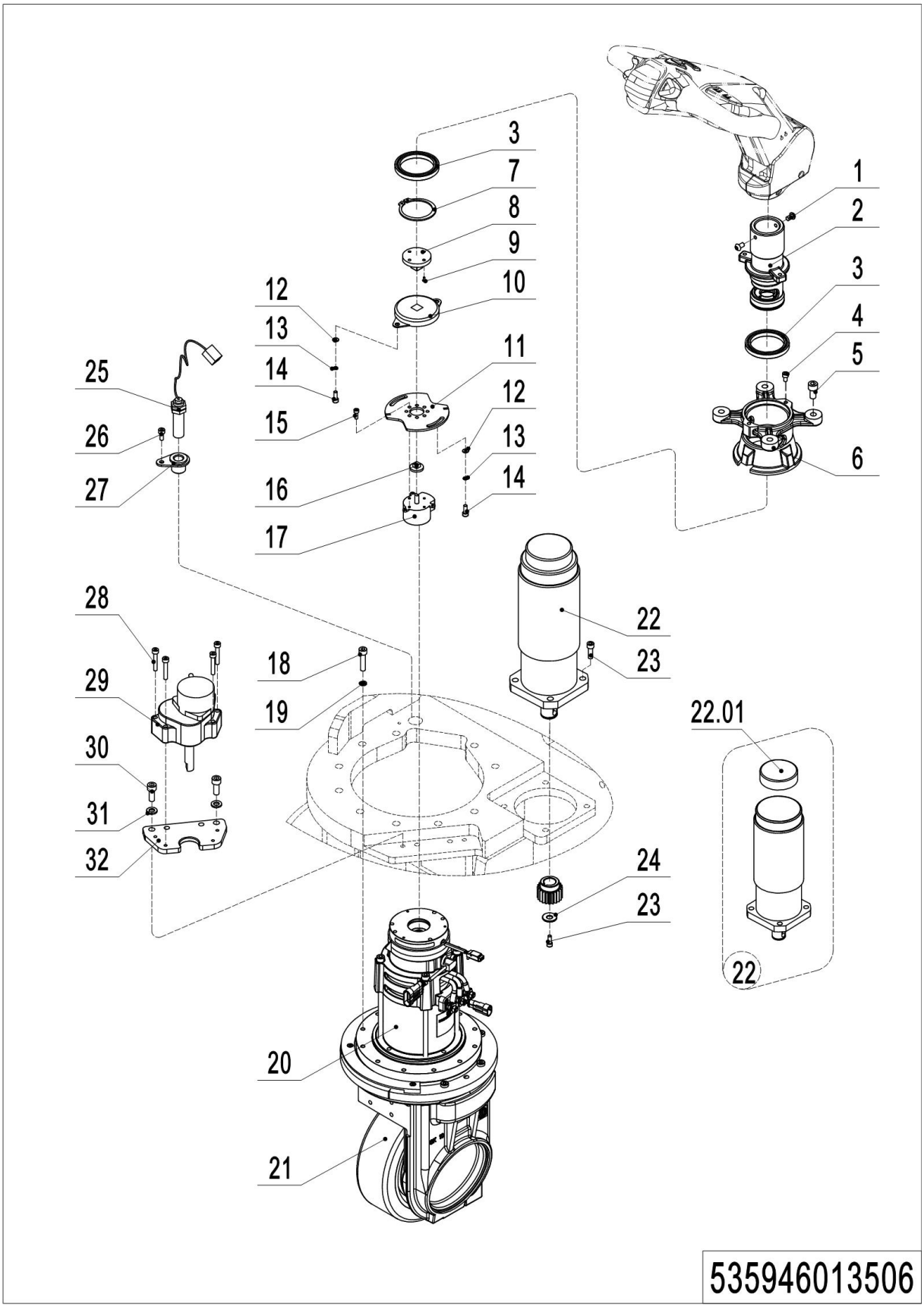

## 04 Power steering Drive Unit(EN1175-2020)(535946013506) Continuation

| No. | Item Code | Mark | Item Description | Qty. | Substitute | Note |
|---|---|---|---|---|---|---|
| 30 | 910200200035 | | Screw | 2 | | |
| 31 | 910400100005 | | Flat Washer | 2 | | |
| 32 | 537813520019 | | Mounting Plate | 1 | | |

## 05 Drive and Steering Unit 1.4kW (535946013504)

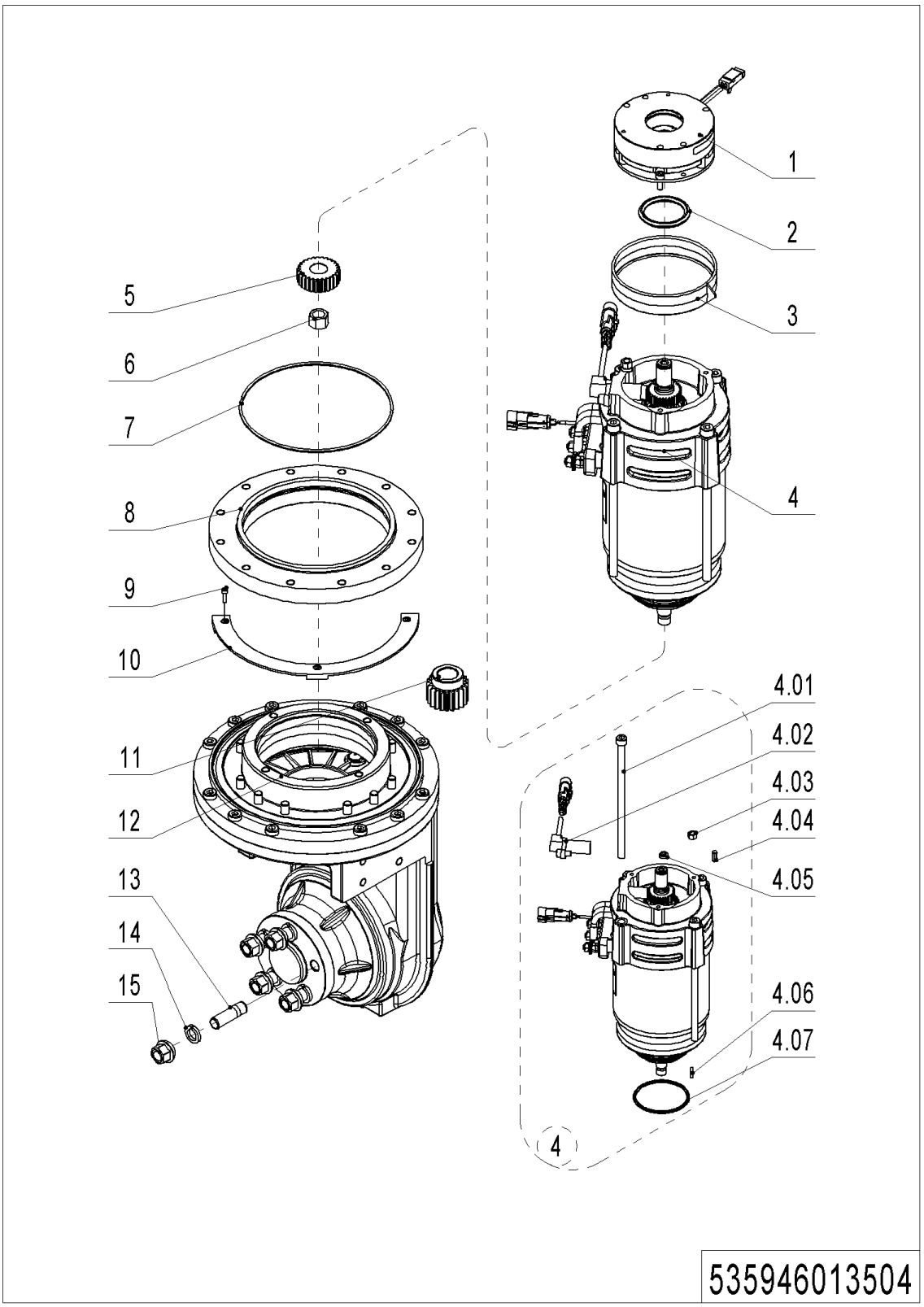

## 05 Drive and Steering Unit 1.4kW (535946013504)

| No. | Item Code | Mark | Item Description | Qty. | Substitute | Note |
|---|---|---|---|---|---|---|
| 1 | 535998510001 | | Brake | 1 | | |
| 2 | 535998520000 | | Locating Ring | 1 | | |
| 3 | 535998520001 | | Division Plate | 1 | | |
| 4 | 535998510003 | | Motor | 1 | | |
| 4.01 | 535998520002 | | Screw | 4 | | |
| 4.02 | 535998510002 | | Sensor | 1 | | |
| 4.03 | 535998520003 | | Nut | 1 | | |
| 4.04 | 535998520005 | | Feather Key | 1 | | |
| 4.05 | 535998520004 | | Safety Element | 1 | | |
| 4.06 | 535998520006 | | Key | 1 | | |
| 4.07 | 535998520007 | | O-Ring | 1 | | |
| 5 | 535998520014 | | Gear | 1 | | |
| 6 | 535998520008 | | Nut | 1 | | |
| 7 | 535998520009 | | O-Ring | 1 | | |
| 8 | 535998520010 | | Plate | 1 | | |
| 9 | 535998520015 | | Screw | 3 | | |
| 10 | 535998520016 | | Limiter | 1 | | |
| 11 | 535998520017 | | Gear | 1 | | |
| 12 | 535998510005 | | Gearbox Assembly | 1 | | |
| 13 | 535998520011 | | Bolt | 5 | | |
| 14 | 535998520012 | | Washer | 5 | | |
| 15 | 535998520013 | | Nut | 5 | | |

# Chapter 2: Hydraulic System

## 01 Hydraulic Pipeline (535946024001)

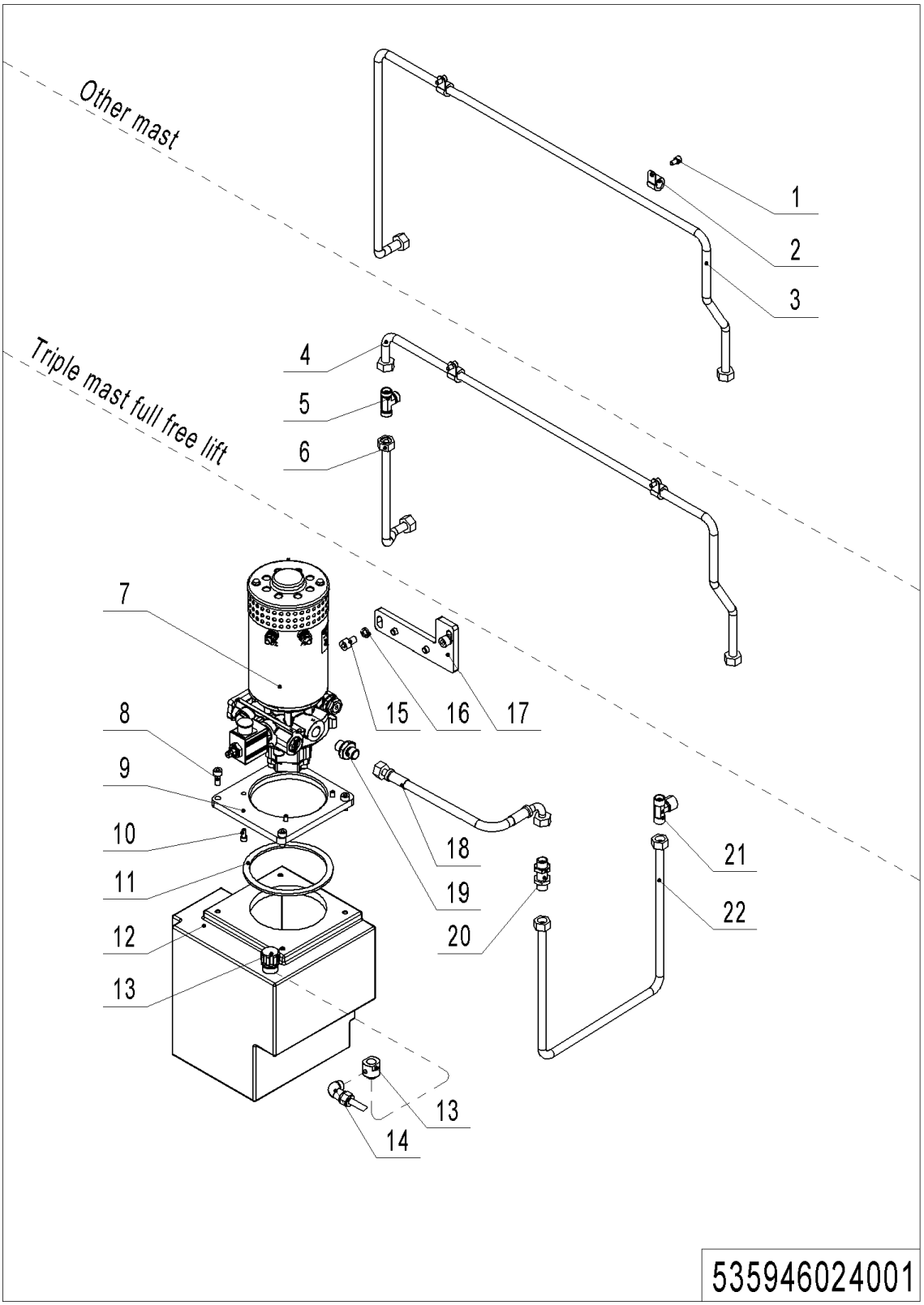

## 01 Hydraulic Pipeline (535946024001)

| No. | Item Code | Mark | Item Description | Qty. | Substitute | Note |
|---|---|---|---|---|---|---|
| 1 | 910200200032 | 1 | Screw | 2 | | |
| 2 | 951000100001 | | Hose Clamp | 2 | | |
| 3 | 535624010002 | | Steel Tube | 1 | | **Double mast** |
| 3 | 535924010004 | | Steel Tube | 1 | | **TX** |
| 4 | 535924010002 | | Steel Tube | 1 | | |
| 5 | 950400700002 | | Joint | 1 | | |
| 6 | 533545020026 | | Steel Tube | 1 | | |
| 7 | 950900100015 | 5 | Pump Unit | 1 | | **See 534746023501** |
| 7 | 950900100062 | 5 | Pump Unit | 1 | | **See535946023501** |
| 7 | 950900100098 | 5 | Pump Unite | 1 | | **See535946023502** |
| 8 | 910200200057 | 1 | Screw | 4 | | |
| 9 | 535919020005 | | Mounting Plate | 1 | | |
| 10 | 910200200034 | 1 | Screw | 4 | | |
| 11 | 535919020003 | | Sealing Gasket | 1 | | |
| 12 | 535919020001 | | Tank | 1 | | |
| 12 | 535919020004 | | Tank | 1 | | EPS,EN1175-2020 |
| 13 | 951100200001 | | Screw Plug | 1 | | |
| 13 | 532624020015 | | Adapter | 1 | | **TX** |
| 14 | 950500100001 | | Joint | 3 | | **TX** |
| 15 | 910200200074 | | Screw | 4 | | |
| 16 | 910400500007 | | Spring Washer | 4 | | |
| 17 | 535924020001 | | Mounting Plate | 1 | | |
| 18 | 201027520002 | | Hose | 1 | | |
| 19 | 950400300005 | | Joint | 1 | | |
| 20 | 950400500001 | | Joint | 1 | | |
| 21 | 950400900002 | | Joint | 1 | | |
| 22 | 535924010001 | | Steel Tube | 1 | | |

## 02 Pump Unit (HPI,3.2KW) (534746023501)

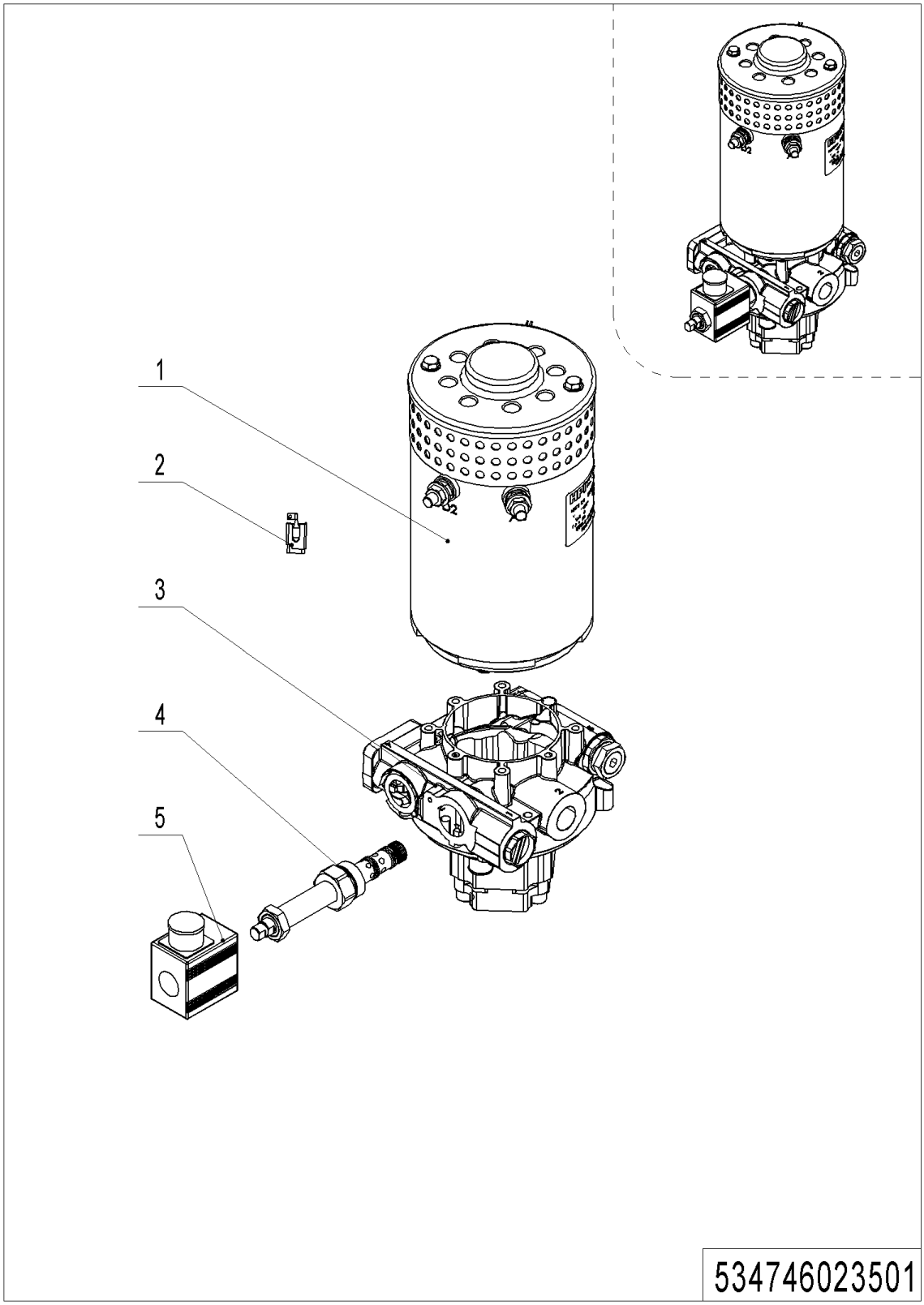


---

**1= Supply as package. 2= Supply with constraints. 3= Phasing-out supply. 4= Supply as assembly. 5= Check other tables.**

## 02 Pump Unit (534746023501)

| No. | Item Code | Mark | Item Description | Qty. | Substitute | Note |
|---|---|---|---|---|---|---|
| -- | 950900100015 | 5 | Pump Unit | 1 | | **HPI,3.2KW** |
| 1 | 534798510006 | 2 | Motor | 1 | | |
| 2 | 534798520026 | 2 | Carbon Brush | 1 | | |
| 3 | 534798510007 | 2 | Valve Block | 1 | | |
| 4 | 534798520024 | 2 | Magnetic Valve | 1 | | **Provide with coil** |
| 5 | 534798520025 | 2 | Coil | 1 | | **Provide with valve** |

---

**1= Supply as package. 2= Supply with constraints. 3= Phasing-out supply. 4= Supply as assembly. 5= Check other tables.**

## 03 Pump Unit (VIBO,3.0KW) (535946023501)

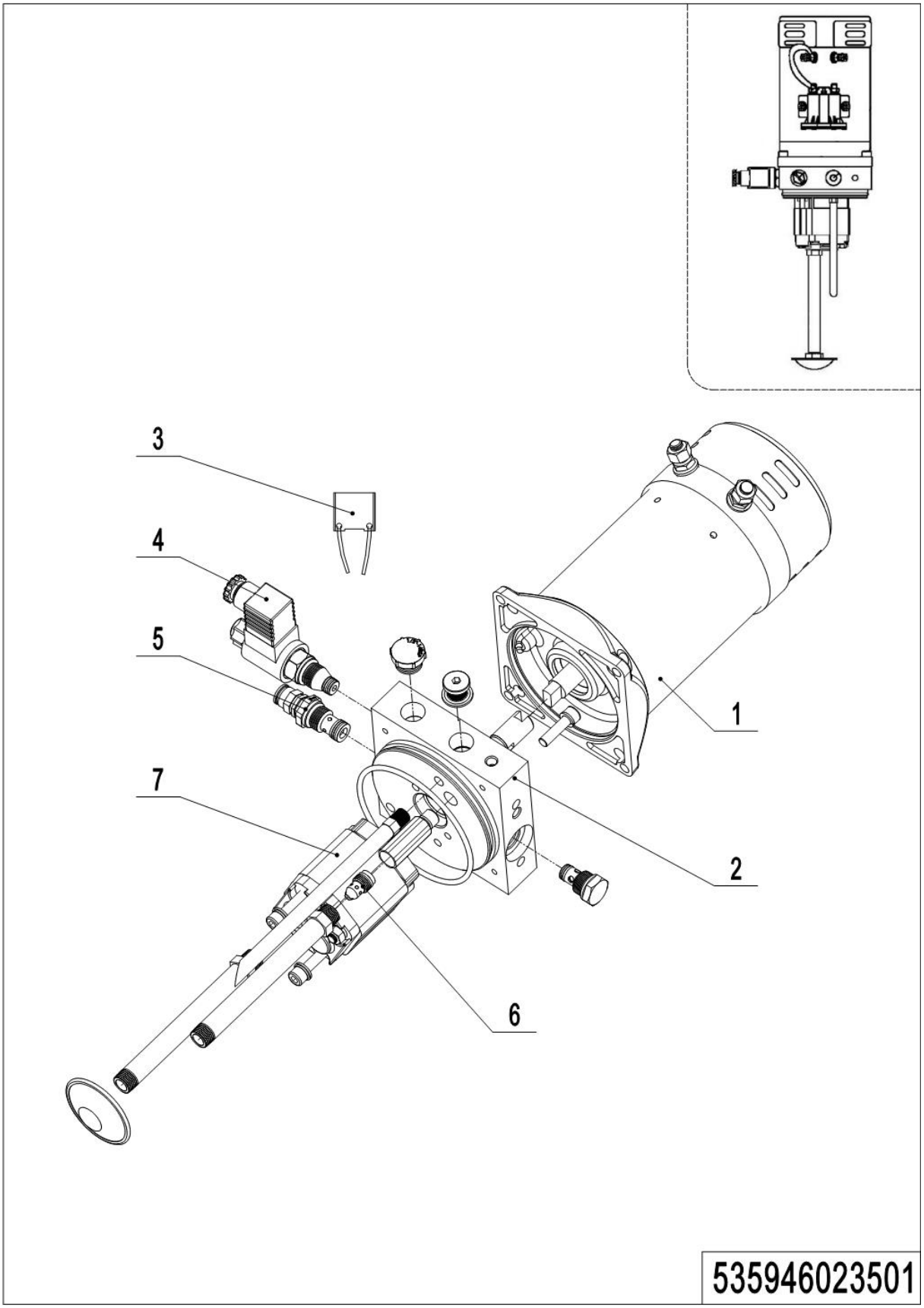


---

**1= Supply as package. 2= Supply with constraints. 3= Phasing-out supply. 4= Supply as assembly. 5= Check other tables.**

## 03 Pump Unit (VIBO,3.0KW) (535946023501)

| No. | Item Code | Mark | Item Description | Qty. | Substitute | Note |
|---|---|---|---|---|---|---|
| -- | 950900100062 | 5 | Pump Unit | 1 | | **VIBO,3.0KW** |
| 1 | 535998510008 | | Motor | 1 | | |
| 2 | 535998520018 | | Valve Block | 1 | | |
| 3 | 535998510019 | | Carbon Brush | 1 | | |
| 4 | 535998510009 | | Magnetic Valve | 1 | | |
| 5 | 535998510011 | | Overflow Valve | 1 | | |
| 6 | 535998510012 | | Valve | 1 | | |
| 7 | 505998510013 | | Gear Pump | 1 | | |

## 04 Pump Unit (VIBO,3.2KW) (534746023502)

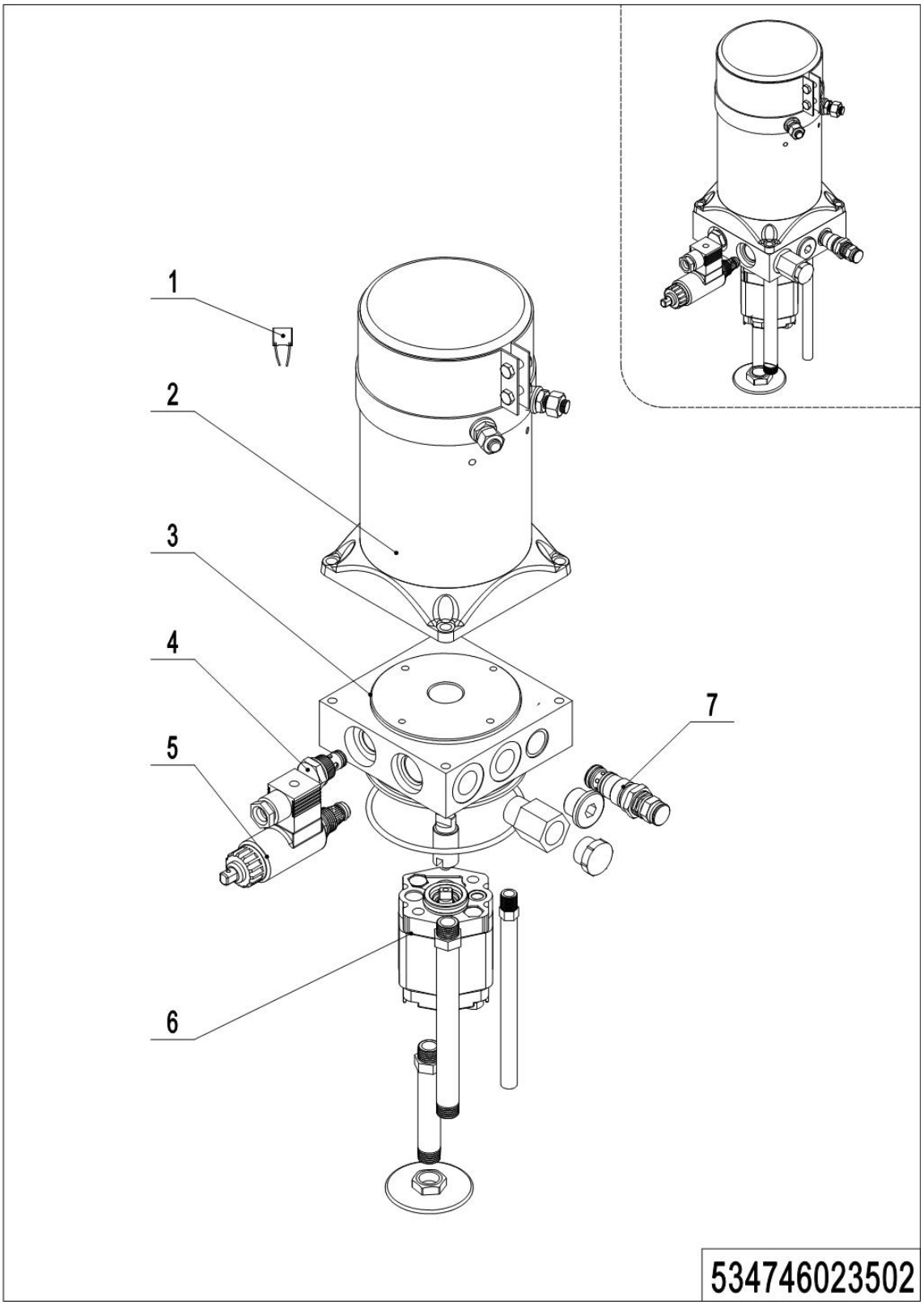


---

**1= Supply as package. 2= Supply with constraints. 3= Phasing-out supply. 4= Supply as assembly. 5= Check other tables.**

## 04 Pump Unit (VIBO,3.2KW) (534746023502)

| No. | Item Code | Mark | Item Description | Qty. | Substitute | Note |
|---|---|---|---|---|---|---|
| -- | 950900100098 | | Pump Unite | 1 | | **VIBO,3.2KW** |
| 1 | 535998510013 | 2 | Carbon Brush | 1 | | |
| 2 | 534798510012 | 2 | Motor | 1 | | |
| 3 | 534798510013 | 2 | Valve Block | 1 | | |
| 4 | 532098510003 | 2 | Check Valve | 1 | | |
| 5 | 534798510014 | 2 | Magnetic Valve | 1 | | |
| 6 | 534798510015 | 2 | Gear Pump | 1 | | |
| 7 | 402698520018 | 2 | Overflow Valve | 1 | | |

# Chapter 3: Truck Frame

## 01 Chassis (535946021501)

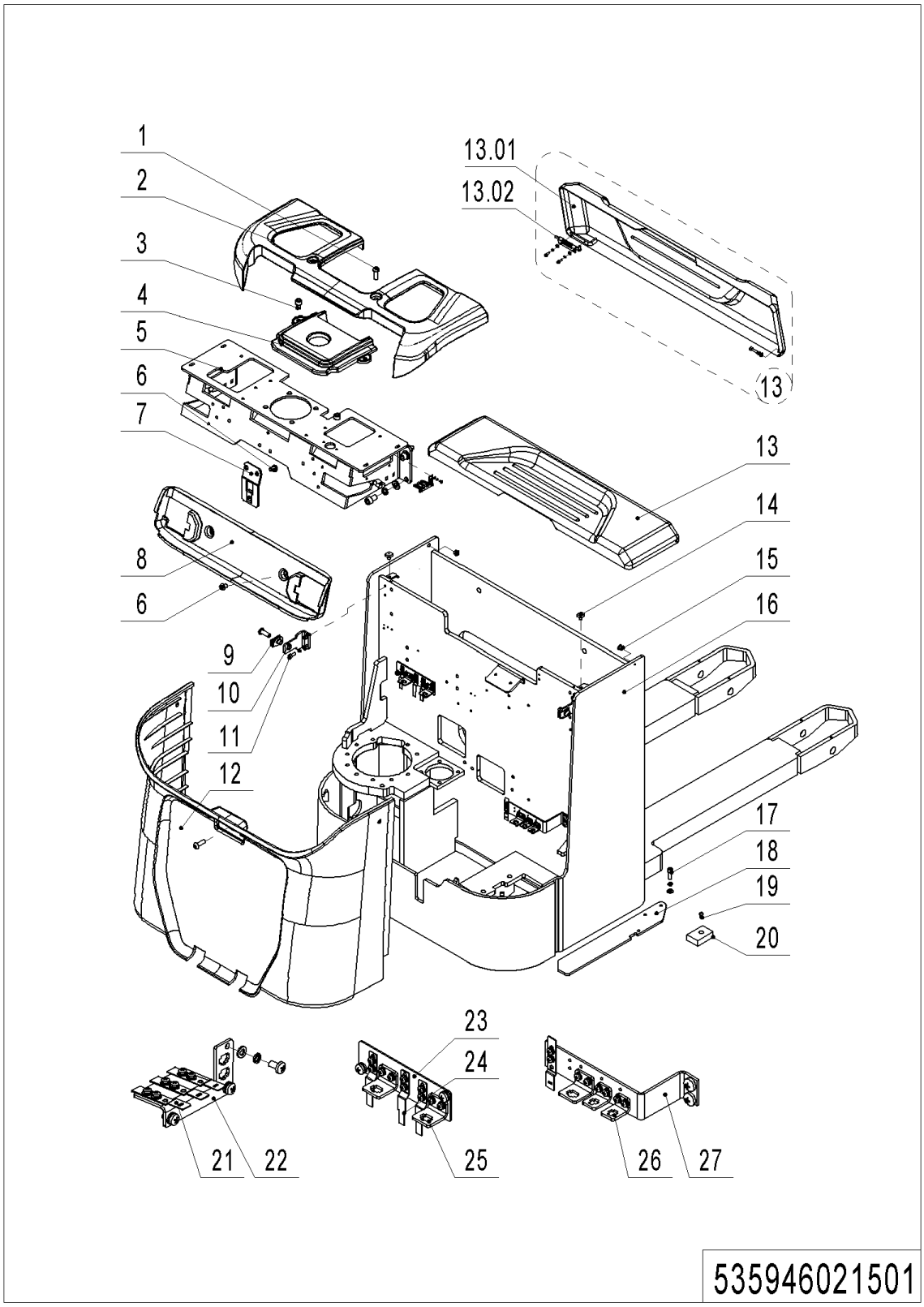

## 01 Chassis (535946021501)

| No. | Item Code | Mark | Item Description | Qty. | Substitute | Note |
|---|---|---|---|---|---|---|
| 1 | 941100100004 | 1 | Screw | 5 | | |
| 2 | 535921520040 | | Protective Cover | 1 | | |
| 3 | 910200200074 | 1 | Screw | 2 | | |
| 4 | 535921520042 | | Protective Cover | 1 | | |
| 5 | 535917510000 | | Mounting Base | 1 | | |
| 6 | 941100100005 | 1 | Screw | 4 | | |
| 7 | 535921520032 | | Mounting Plate | 1 | | |
| 8 | 535921520041 | | Protective Cover | 1 | | |
| 9 | 940400400003 | | Cage Nut | 3 | | |
| 10 | 535921520031 | | Mounting Plate | 2 | | |
| 11 | 910200200035 | 1 | Screw | 8 | | |
| 12 | 535921520039 | | Protective Cover | 1 | | |
| 13 | 535998510007 | | Cell Cover Assembly | 1 | | |
| 13.01 | 535921010001 | | Cell Cover | 1 | | |
| 13.02 | 940800900001 | | Lock Pin | 1 | | |
| 14 | 505938520016 | | Crash Pad | 2 | | |
| 15 | 534721520023 | | Sleeve | 2 | | |
| 16 | 535921510009 | 2 | Chassis(570) | 1 | | |
| 16 | 535921510010 | 2 | Chassis(685) | 1 | | |
| 16 | 535921510007 | 2 | Chassis(Power steering，570) | 1 | | |
| 16 | 535921510008 | 2 | Chassis(Power steering，685) | 1 | | |
| 17 | 910200200058 | 1 | Screw | 3 | | |
| 18 | 535921520030 | | Guard Plate | 1 | | |
| 19 | 910200300017 | | Screw | 2 | | |
| 20 | 534721520024 | | Crash Pad | 2 | | |
| 21 | 921300300005 | | Holder | 5 | | |
| 22 | 535921520028 | | Mounting Plate | 1 | | |
| 23 | 535921520027 | | Mounting Plate | 1 | | |
| 24 | 921300300010 | | Connector Holder | 3 | | |
| 25 | 921300300003 | | Holder | 3 | | |

## 01 Chassis (535946021501) Continuation

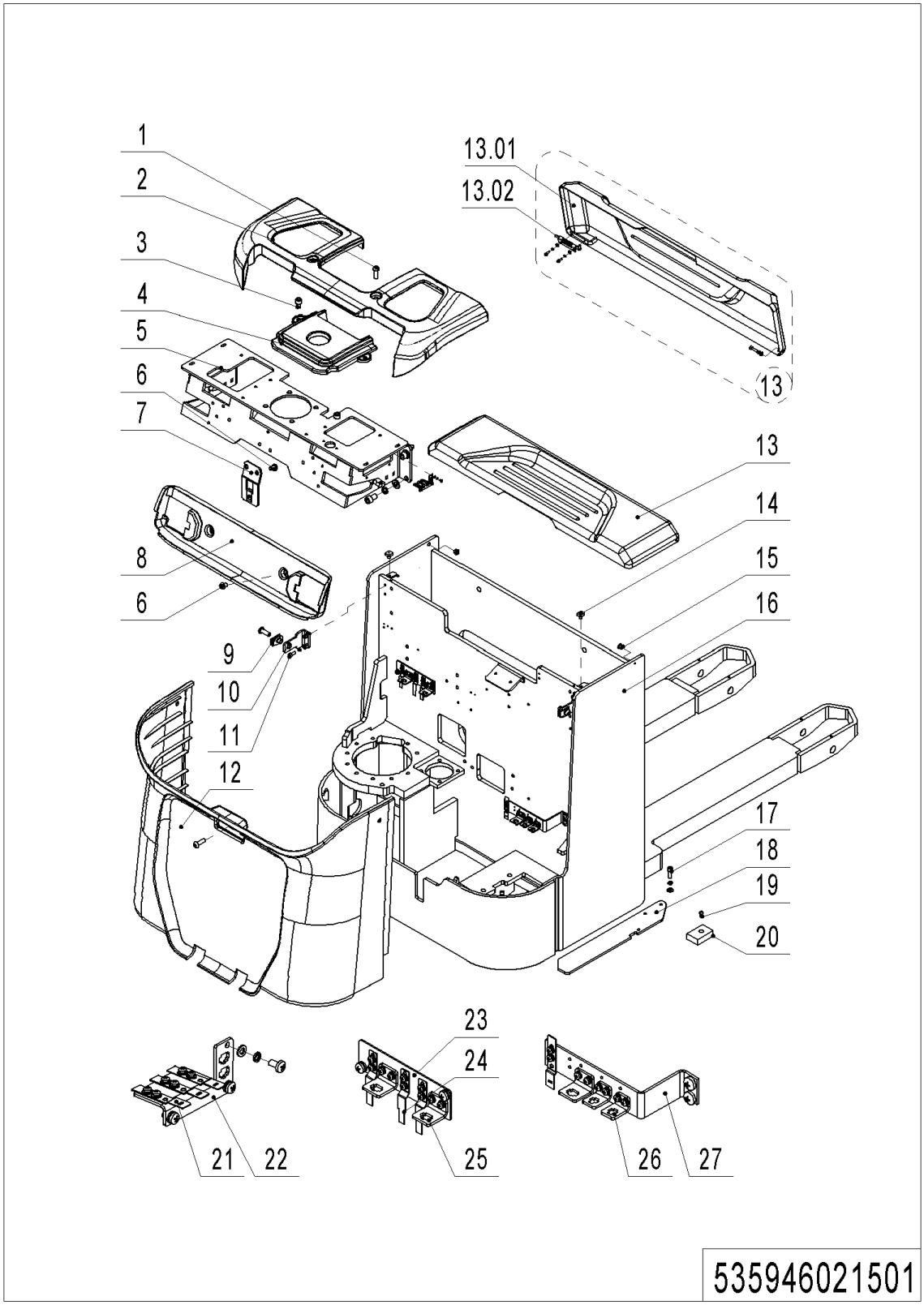

## 01 Chassis (535946021501) Continuation

| No. | Item Code | Mark | Item Description | Qty. | Substitute | Note |
|---|---|---|---|---|---|---|
| 26 | 921300300002 | | Holder | 2 | | |
| 27 | 535921520026 | | Mounting Plate | 1 | | |

## 02 Chassis (Sideways Exchange) (535946021502)

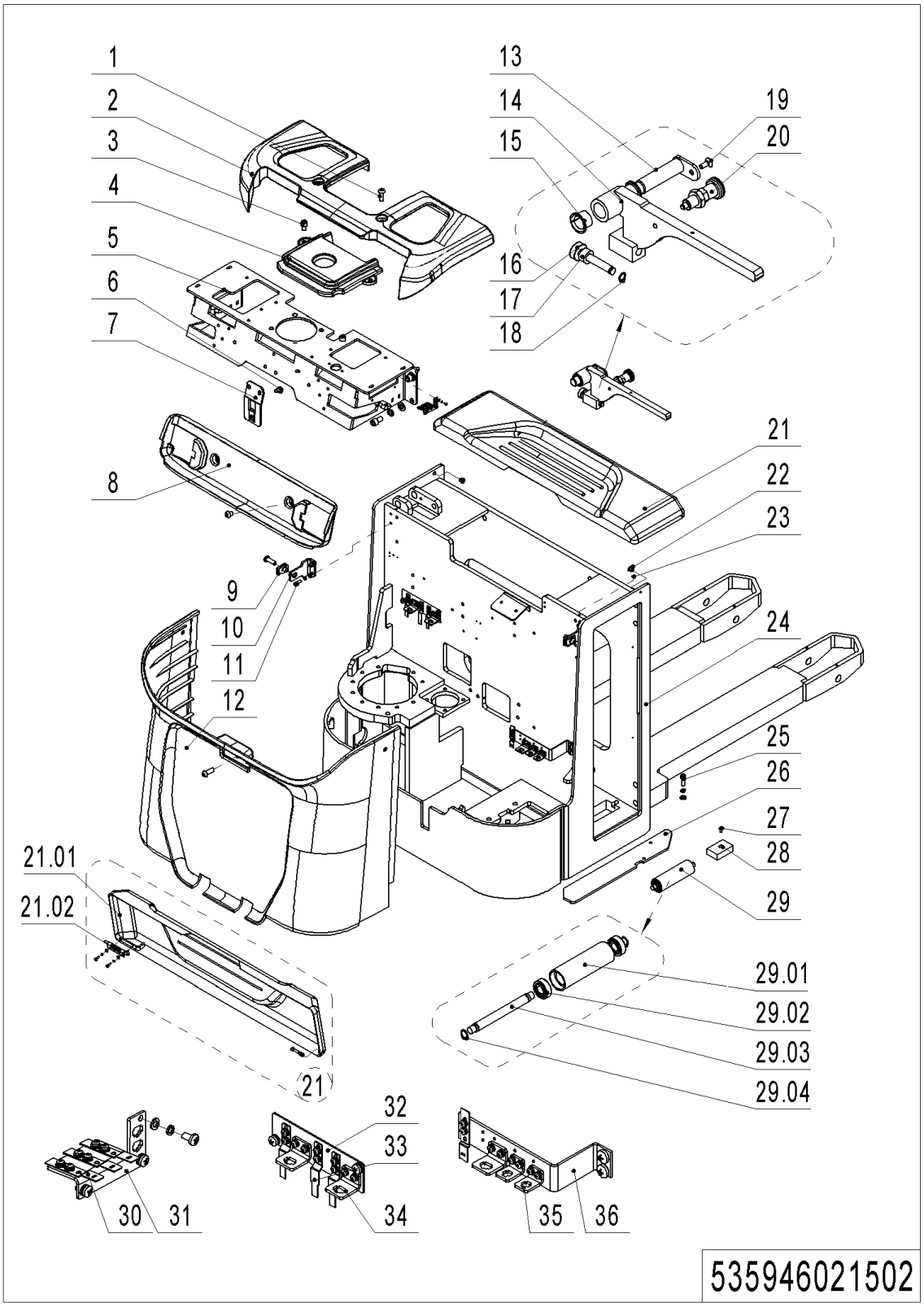

## 02 Chassis (Sideways Exchange) (535946021502)

| No. | Item Code | Mark | Item Description | Qty. | Substitute | Note |
|---|---|---|---|---|---|---|
| 1 | 941100100004 | | Screw | 5 | | |
| 2 | 535921520040 | | Protective Cover | 1 | | |
| 3 | 910200200074 | | Screw | 2 | | |
| 4 | 535921520042 | | Protective Cover | 1 | | |
| 5 | 535917510000 | | Mounting Base | 1 | | |
| 6 | 941100100005 | | Screw | 4 | | |
| 7 | 535921520032 | | Mounting Plate | 1 | | |
| 8 | 535921520041 | | Protective Cover | 1 | | |
| 9 | 940400400003 | | Cage Nut | 3 | | |
| 10 | 535921520031 | | Mounting Plate | 2 | | |
| 11 | 910200200035 | | Screw | 8 | | |
| 12 | 535921520039 | | Protective Cover | 1 | | |
| 13 | 535921510004 | | Pin | 1 | | |
| 14 | 535921510003 | | Baffle | 1 | | |
| 15 | 940500200008 | | Bushing | 2 | | |
| 16 | 535921520037 | | Pin | 1 | | |
| 17 | 535921520038 | | Spacer Bush | 1 | | |
| 18 | 910401300002 | | Circlip | 1 | | |
| 19 | 910200400017 | | Screw | 1 | | |
| 20 | 940800900002 | | Indexing Plunger | 1 | | |
| 21 | 535998510007 | | Cell Cover Assembly | 1 | | |
| 21.01 | 535921010001 | | Cell Cover | 1 | | |
| 21.02 | 940800900001 | | Lock Pin | 1 | | |
| 22 | 534721520023 | | Sleeve | 2 | | |
| 23 | 535917520012 | | Protective Mat | 2 | | |
| 24 | 535921510000 | | Chassis(570) | 1 | | **sideways Exchange** |
| 24 | 535921510005 | | Chassis(685) | 1 | | **sideways Exchange** |
| 24 | 535921510001 | | Chassis(Power steering，570) | 1 | | **sideways Exchange** |
| 24 | 535921510006 | | Chassis(Power steering，685) | 1 | | **sideways Exchange** |
| 25 | 910200200058 | | Screw | 3 | | |

---

**1= Supply as package. 2= Supply with constraints. 3= Phasing-out supply. 4= Supply as assembly. 5= Check other tables.**

## 02 Chassis (Sideways Exchange) (535946021502) Continuation

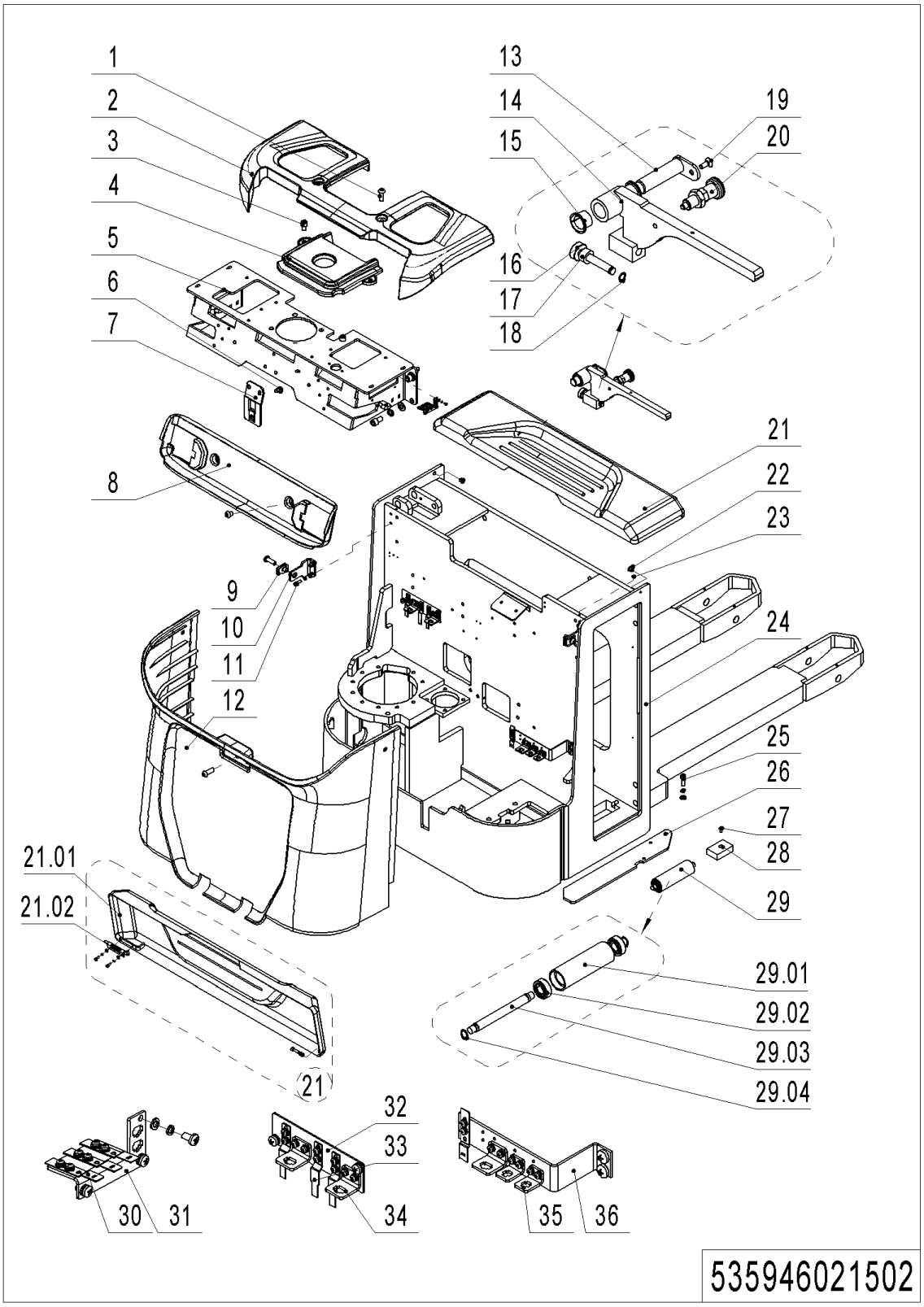

## 02 Chassis (Sideways Exchange) (535946021502) Continuation

| No. | Item Code | Mark | Item Description | Qty. | Substitute | Note |
|---|---|---|---|---|---|---|
| 26 | 535921520030 | | Guard Plate | 1 | | |
| 27 | 910200300017 | | Screw | 2 | | |
| 28 | 534721520024 | | Crash Pad | 2 | | |
| 29 | 534721510003 | | Roller | 6 | | |
| 29.01 | 534721520028 | | Roller | 6 | | |
| 29.02 | 910700200017 | | Bearing | 12 | | |
| 29.03 | 534721520029 | | Axle | 6 | | |
| 29.04 | 910401300006 | 1 | Circlip | 12 | | |
| 30 | 921300300005 | | Holder | 5 | | |
| 31 | 535921520028 | | Mounting Plate | 1 | | |
| 32 | 535921520027 | | Mounting Plate | 1 | | |
| 33 | 921300300010 | | Connector Holder | 3 | | |
| 34 | 921300300003 | | Holder | 3 | | |
| 35 | 921300300002 | | Holder | 2 | | |
| 36 | 535921520026 | | Mounting Plate | 1 | | |

## 03 Protective Arm (535946017501)

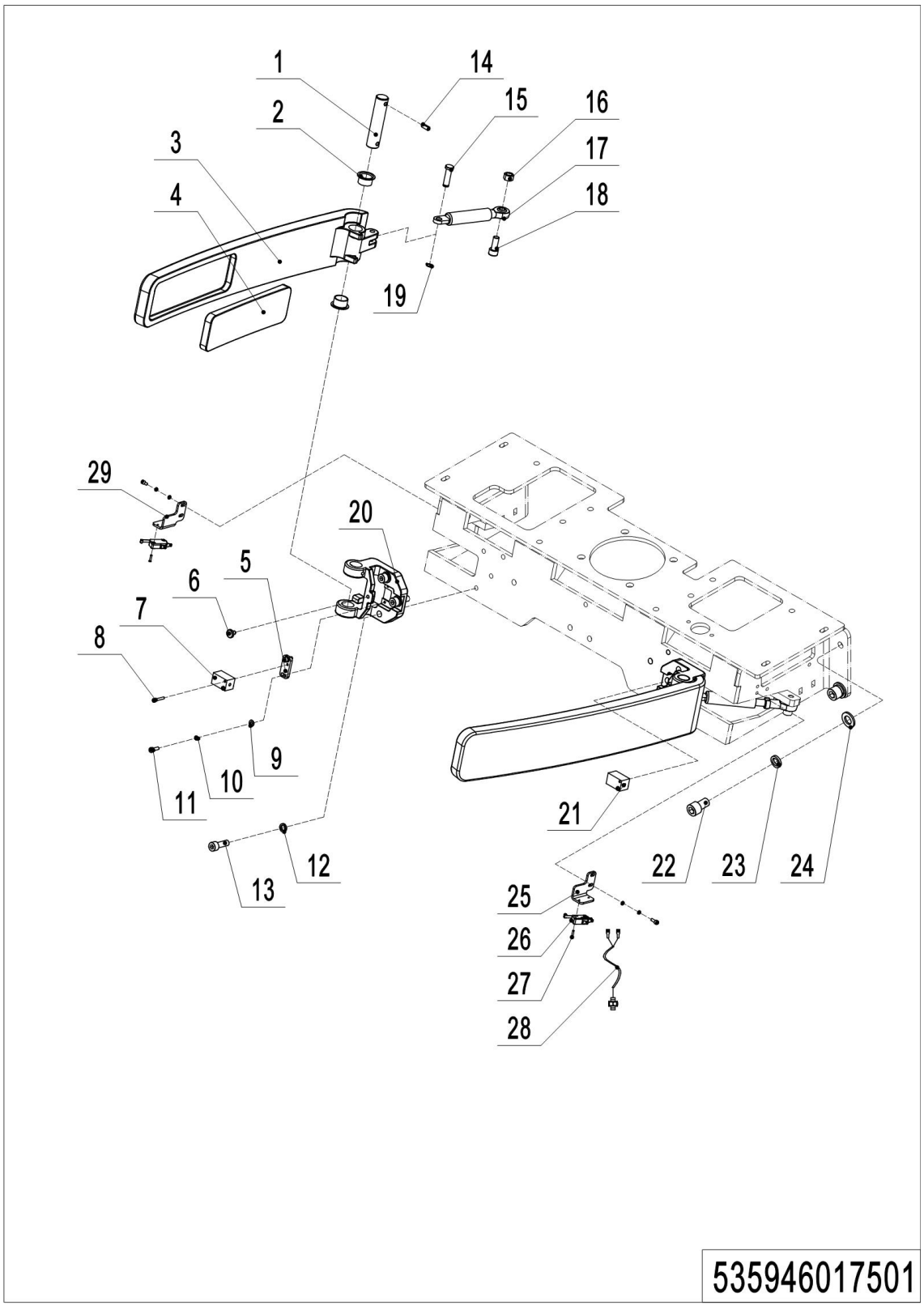

## 03 Protective Arm (535946017501)

| No. | Item Code | Mark | Item Description | Qty. | Substitute | Note |
|---|---|---|---|---|---|---|
| 1 | 535917520007 | | Axle | 2 | | |
| 2 | 940500200003 | | Bushing | 2 | | |
| 3 | 535917520008 | | Protective Arm | 2 | | |
| 4 | 535917520009 | | Protective Mat | 2 | | |
| 5 | 535917520011 | | Mounting Plate | 2 | | |
| 6 | 535917520012 | | Protective Mat | 2 | | |
| 7 | 535933510001 | | Proximity Switch | 1 | | |
| 8 | 910200500015 | 1 | Screw | 4 | | |
| 9 | 910400100003 | 1 | Flat Washer | 8 | | |
| 10 | 910400500003 | 1 | Spring Washer | 8 | | |
| 11 | 910200200014 | 1 | Screw | 8 | | |
| 12 | 910400500006 | 1 | Spring Washer | 6 | | |
| 13 | 910200200058 | 1 | Screw | 6 | | |
| 14 | 910600400025 | 1 | Spring Pin | 2 | | |
| 15 | 535917520010 | | Axle | 2 | | |
| 16 | 910300100006 | 1 | Nut | 2 | | |
| 17 | 940400100037 | | Air Spring | 2 | | |
| 18 | 910200200060 | 1 | Screw | 2 | | |
| 19 | 910401300001 | 1 | Circlip | 2 | | |
| 20 | 535917520006 | | Mounting Base | 2 | | |
| 21 | 535933510000 | | Proximity Switch | 1 | | |
| 22 | 910200200096 | 1 | Screw | 4 | | |
| 23 | 910400500008 | 1 | Spring Washer | 4 | | |
| 24 | 910400100008 | 1 | Flat Washer | 4 | | |
| 25 | 535917520013 | | Mounting Plate | 1 | | With safety switch |
| 26 | 920200300016 | | Micro Switch | 2 | | With safety switch |
| 27 | 910200500014 | | Screw | 4 | | With safety switch |
| 28 | 506733010025 | | Wire Harness | 2 | | With safety switch |
| 29 | 535917520014 | | Mounting Plate | 1 | | With safety switch |

## 04 Platform (535946018001)

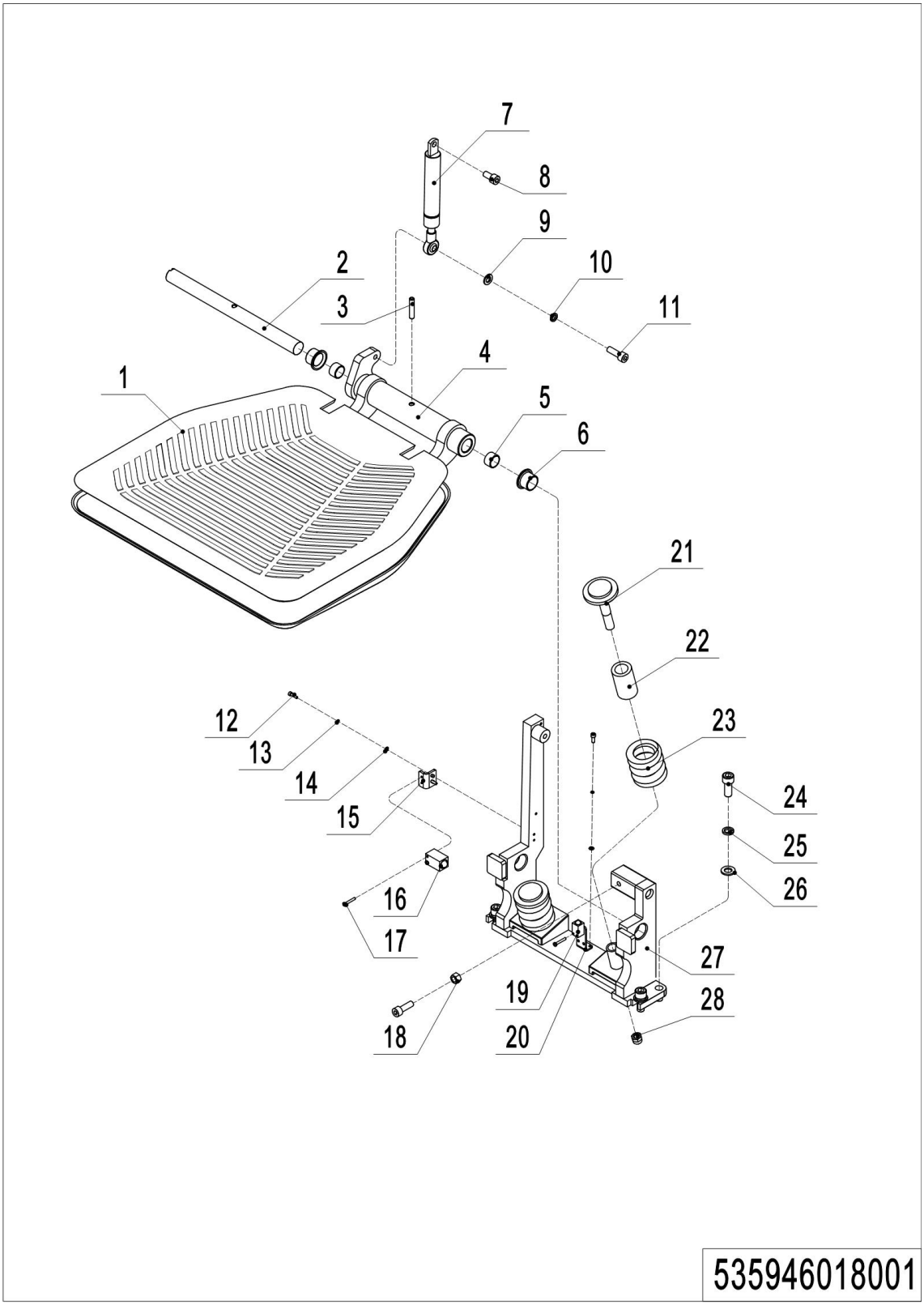

## 04 Platform (535946018001)

| No. | Item Code | Mark | Item Description | Qty. | Substitute | Note |
|---|---|---|---|---|---|---|
| 1 | 535918020019 | | Pedal Pad | 1 | | |
| 2 | 535918020014 | | Axle | 1 | | |
| 3 | 910600400040 | | Spring Pin | 1 | | |
| 4 | 535918010001 | | Platform | 1 | | |
| 5 | 940500100019 | | Bushing | 2 | | |
| 6 | 940500200008 | | Bushing | 2 | | |
| 7 | 940400100042 | | Air Spring | 1 | | |
| 7 | 940400100057 | | Air Spring | 1 | | With safety switch |
| 8 | 910200200057 | | Screw | 1 | | |
| 9 | 910400100006 | | Flat Washer | 1 | | |
| 10 | 910400500006 | | Spring Washer | 1 | | |
| 11 | 910200200058 | | Screw | 2 | | |
| 12 | 910200200014 | | Screw | 4 | | |
| 13 | 910400500003 | | Spring Washer | 4 | | |
| 14 | 910400100003 | | Flat Washer | 4 | | |
| 15 | 535918020015 | | Mounting Plate | 1 | | |
| 16 | 535933510002 | | Proximity Switch | 1 | | |
| 17 | 910200500015 | | Screw | 2 | | |
| 18 | 910300100007 | | Nut | 1 | | |
| 19 | 506733510005 | | Proximity Switch | 1 | | With safety switch |
| 20 | 535918020022 | | Mounting Plate | 1 | | With safety switch |
| 21 | 535918020017 | | Bolt | 2 | | |
| 22 | 535918020018 | | Cushion Collar | 2 | | |
| 23 | 535918020016 | | Spring | 2 | | |
| 24 | 910200200076 | | Screw | 4 | | |
| 25 | 910400500007 | | Spring Washer | 4 | | |
| 26 | 910400100007 | | Flat Washer | 4 | | |
| 27 | 535918010000 | | Mounting Base | 1 | | |
| 28 | 910300500006 | | Nut | 2 | | |

## 05 Platform (EPS,EN1175-2020) (535946018002)

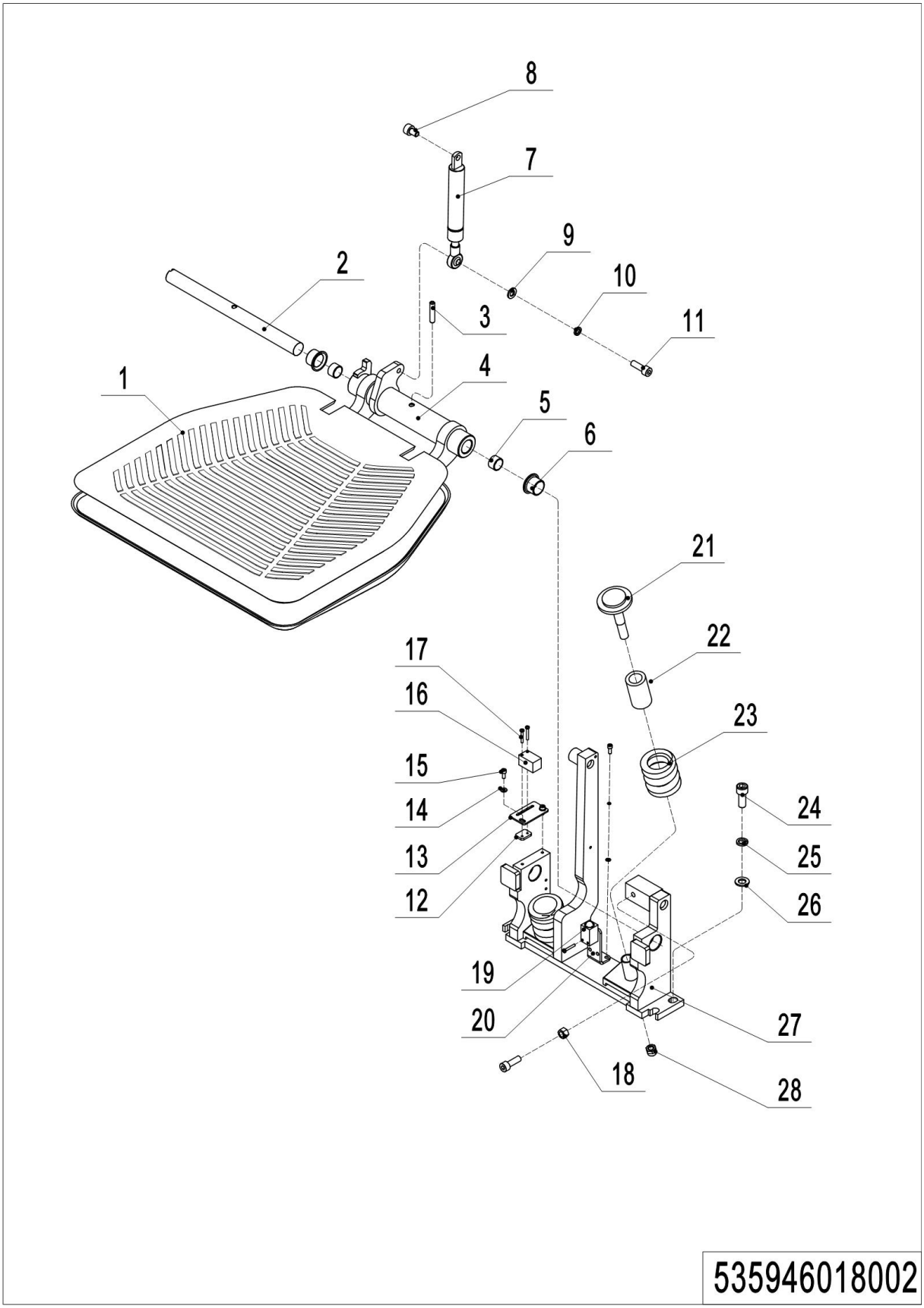

## 05 Platform(EPS,EN1175-2020) (535946018002)

| No. | Item Code | Mark | Item Description | Qty. | Substitute | Note |
|---|---|---|---|---|---|---|
| 1 | 535918020019 | | Pedal Pad | 1 | | |
| 2 | 535918020014 | | Axle | 1 | | |
| 3 | 910600400040 | | Spring Pin | 1 | | |
| 4 | 562618010001 | | Platform | 1 | | |
| 5 | 940500100019 | | Bushing | 2 | | |
| 6 | 940500200008 | | Bushing | 2 | | |
| 7 | 940400100057 | | Air Spring | 1 | | |
| 8 | 910200200057 | | Screw | 1 | | |
| 9 | 910400100006 | | Flat Washer | 1 | | |
| 10 | 910400500006 | | Spring Washer | 1 | | |
| 11 | 910200200058 | | Screw | 2 | | |
| 12 | 535918020027 | | Mounting Plate | 1 | | |
| 13 | 562618020005 | | Mounting Plate | 1 | | |
| 14 | 910400100003 | | Flat Washer | 2 | | |
| 15 | 910200200013 | | Screw | 2 | | |
| 16 | 535933510002 | | Proximity Switch | 1 | | |
| 17 | 910200500015 | | Screw | 2 | | |
| 18 | 910300100007 | | Nut | 1 | | |
| 19 | 506733510005 | | Proximity Switch | 1 | | |
| 20 | 535918020022 | | Mounting Plate | 1 | | |
| 21 | 535918020017 | | Bolt | 2 | | |
| 22 | 535918020018 | | Cushion Collar | 2 | | |
| 23 | 535918020016 | | Spring | 2 | | |
| 24 | 910200200076 | | Screw | 4 | | |
| 25 | 910400500007 | | Spring Washer | 4 | | |
| 26 | 910400100007 | | Flat Washer | 4 | | |
| 27 | 562618010000 | | Mounting Base | 1 | | |
| 28 | 910300500006 | | Nut | 2 | | |

## 06 Fork Carriage (534746038001)

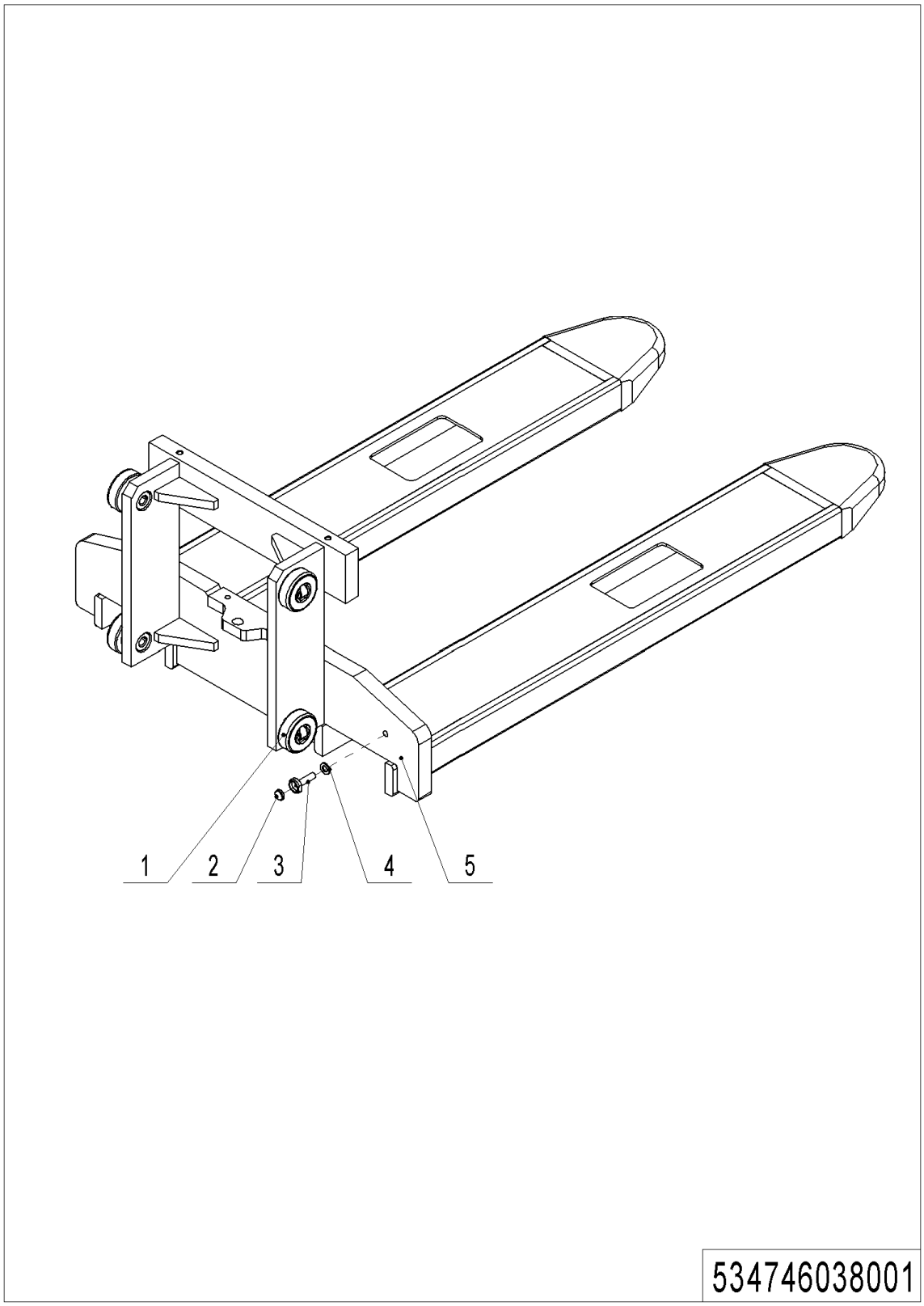


---

**1= Supply as package. 2= Supply with constraints. 3= Phasing-out supply. 4= Supply as assembly. 5= Check other tables.**

## 06 Fork Carriage (534746038001)

| No. | Item Code | Mark | Item Description | Qty. | Substitute | Note |
|---|---|---|---|---|---|---|
| 1 | 940200300005 | | Compound Roller | 4 | | |
| 2 | 940600100001 | | Magnetic Steel | 1 | | |
| 3 | 940600200001 | | Mounting Base | 1 | | |
| 4 | 910400100007 | 1 | Flat Washer | 1 | | |
| 5 | 534738010000 | 2 | Fork(570x1150) | 1 | | **DX** |
| 5 | 534738010001 | 2 | Fork(685x1150) | 1 | | **DX** |
| 5 | 534738010002 | 2 | Fork(570x1150) | 1 | | **DX+FFL** |
| 5 | 534738010003 | 2 | Fork(685x1150) | 1 | | **DX+FFL** |
| 5 | 534738010004 | 2 | Fork(570x1150) | 1 | | **TX** |
| 5 | 534738010005 | 2 | Fork(685x1150) | 1 | | **TX** |
| 5 | 534738010006 | 2 | Fork(570x1150) | 1 | | **TX+FFL** |
| 5 | 534738010007 | 2 | Fork(685x1150) | 1 | | **TX+FFL** |

# Chapter 4: Mast System

## 01 Two-stage Mast Standard Lift (535946044001)

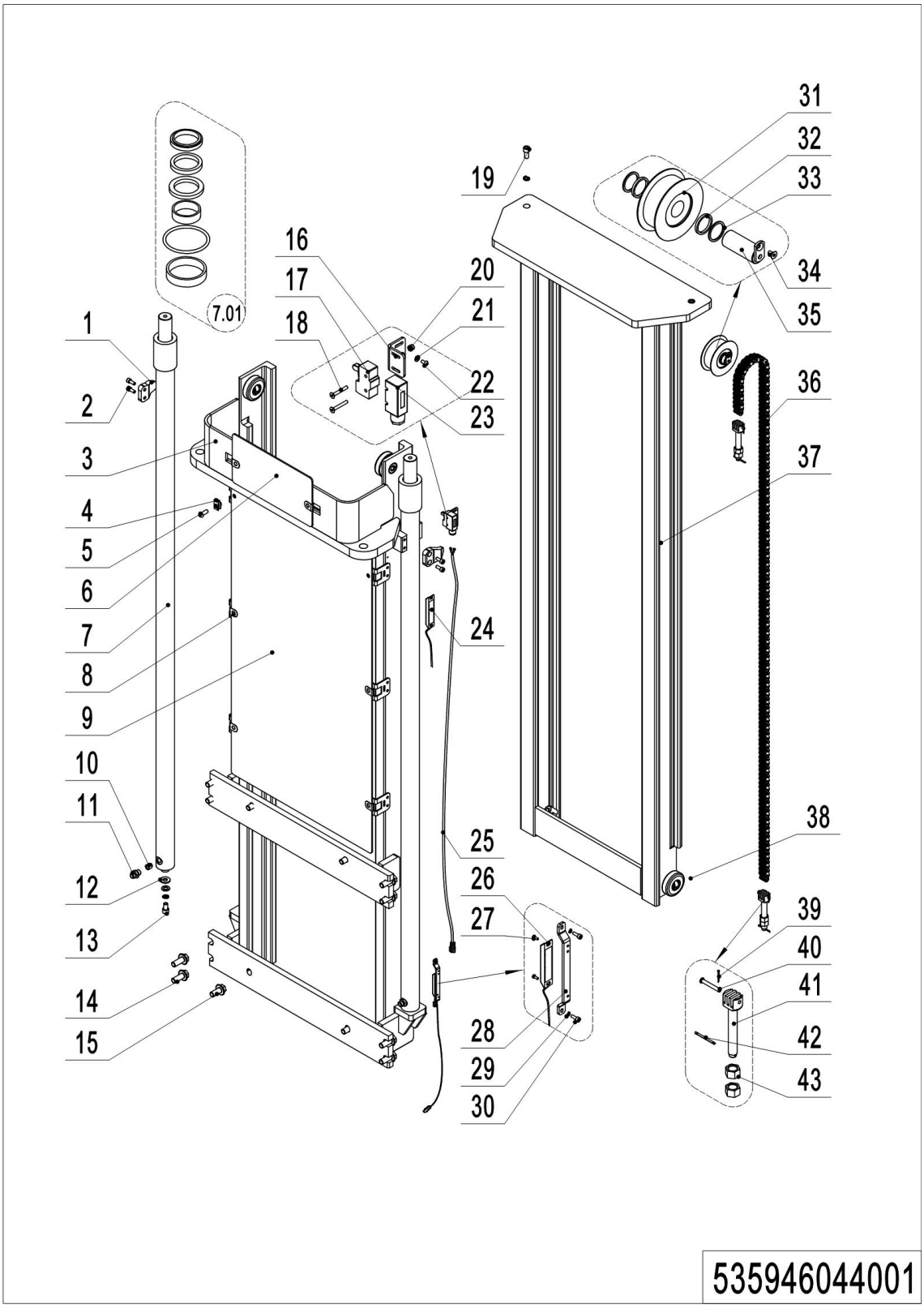

## 01 Two-stage Mast Standard Lift (535946044001)

| No. | Item Code | Mark | Item Description | Qty. | Substitute | Note |
|---|---|---|---|---|---|---|
| 1 | 275044020076 | | Fixing Plate | 2 | | |
| 2 | 910200200057 | 1 | Screw | 4 | | |
| 3 | 534744010013 | 2 | Outer Mast(2900) | 1 | | |
| 3 | 534744010012 | 2 | Outer Mast(3200) | 1 | | |
| 3 | 534744010011 | 2 | Outer Mast(3600) | 1 | | |
| 4 | 940400400003 | | Cage Nut | 2 | | |
| 5 | 941100100005 | 1 | Screw | 2 | | |
| 6 | 534744520037 | | Guard Plate | 1 | | |
| 7 | 534744010008 | | Cylinder | 2 | | **2900** |
| 7 | 534744010007 | | Cylinder | 2 | | **3200** |
| 7 | 534744010006 | | Cylinder | 2 | | **3600** |
| 7.01 | 534798510005 | | Seal Kit | 2 | | |
| 8 | 940400300001 | | Spring Buckle | 4 | | |
| 8 | 940400300001 | | Spring Buckle | 6 | | |
| 9 | 534744020011 | | Guard Plate | 1 | | **2900** |
| 9 | 534744520038 | | Guard Plate | 1 | | **3200** |
| 9 | 534744020006 | | Guard Plate | 1 | | **3600** |
| 10 | 950600300001 | | Safety Valve | 2 | | |
| 11 | 950400400003 | | Joint | 2 | | |
| 12 | 534744520015 | | Subplate | 2 | | |
| 13 | 910200200096 | | Screw | 2 | | |
| 14 | 910100800006 | | Bolt | 8 | | |
| 15 | 910100800005 | | Bolt | 4 | | |
| 16 | 534744520036 | | Fixing Plate | 1 | | |
| 17 | 920200300001 | | Microswitch | 1 | | |
| 18 | 910200400007 | | Screw | 2 | | |
| 19 | 910200200097 | | Screw | 2 | | |
| 20 | 910300500001 | | Nut | 2 | | |
| 21 | 910400100003 | 1 | Flat Washer | 2 | | |
| 22 | 910200300005 | 1 | Screw | 2 | | |

---

**1= Supply as package. 2= Supply with constraints. 3= Phasing-out supply. 4= Supply as assembly. 5= Check other tables.**

## 01 Two-stage Mast Standard Lift (535946044001) Continuation

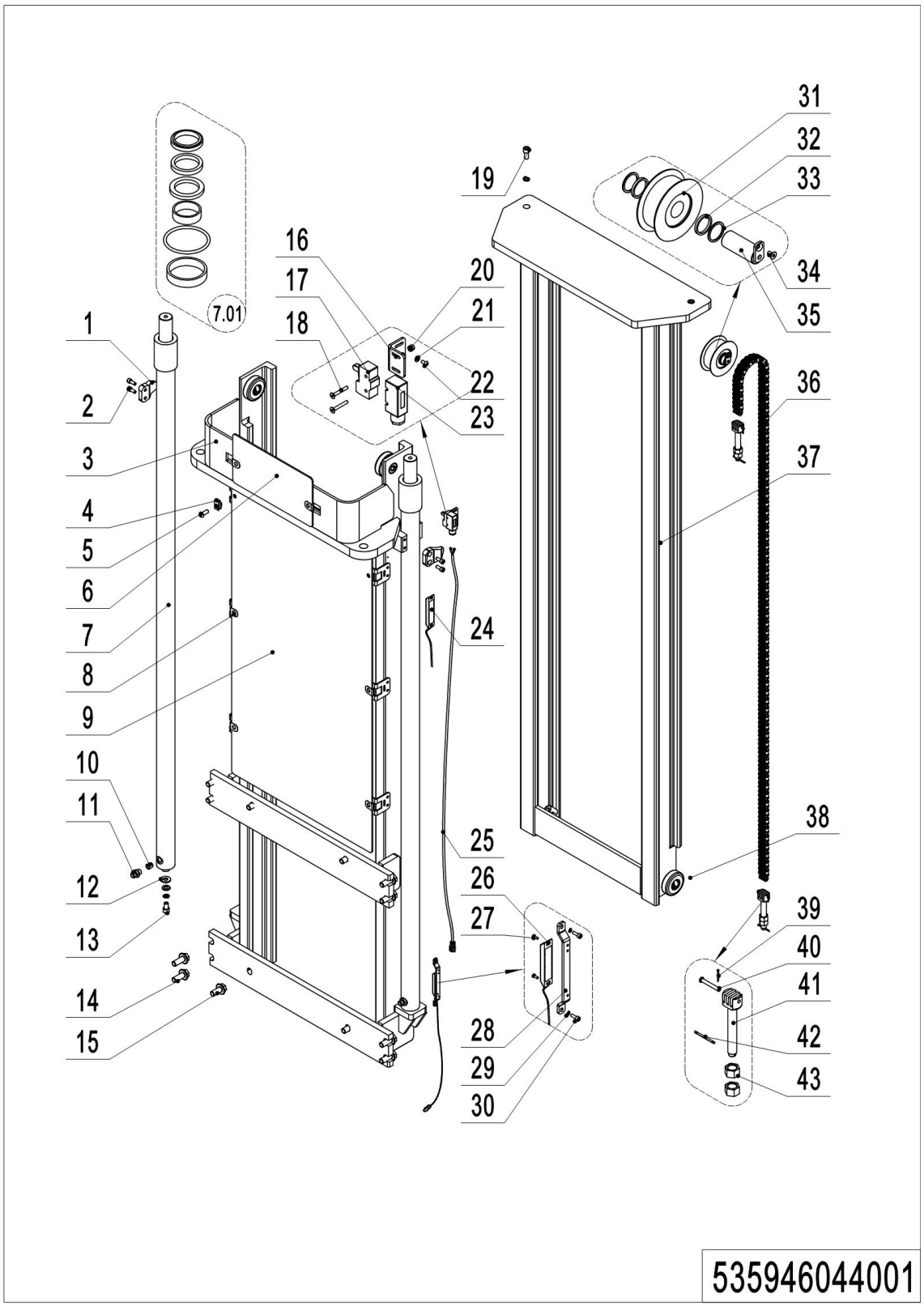

## 01 Two-stage Mast Standard Lift (535946044001) Continuation

| No. | Item Code | Mark | Item Description | Qty. | Substitute | Note |
|---|---|---|---|---|---|---|
| 23 | 920200300008 | | Protective Cover | 1 | | |
| 24 | 535933510013 | 3 | Switch | 1 | | **2900** |
| 24 | 535933510014 | 3 | Switch | 1 | | **3200** |
| 24 | 535933510016 | 3 | Switch | 1 | | **3600** |
| 24 | 535933510021 | | Switch | 1 | | **EN1175-2020** |
| 25 | 535933510025 | | Wire Harness | 1 | | **EN1175-2020** |
| 26 | 535933510005 | 3 | Switch | 1 | | |
| 26 | 535933510020 | | Switch | 1 | | **EN1175-2020** |
| 27 | 910200500010 | 1 | Screw | 4 | | |
| 27 | 910200500021 | 1 | Screw | 4 | | **EN1175-2020** |
| 28 | 534744520059 | | Protective Cover | 2 | | |
| 28 | 534744520080 | | Protective Cover | 2 | | **EN1175-2020** |
| 29 | 910400500003 | 1 | Spring Washer | 4 | | |
| 30 | 910200300006 | 1 | Screw | 4 | | |
| 31 | 940200500010 | | Sprocket Bearing | 1 | | |
| 32 | 940600500009 | | Washer | 2 | | |
| 33 | 940600500008 | | Washer | 2 | | |
| 34 | 910200400016 | 1 | Screw | 1 | | |
| 35 | 533544510006 | | Pin | 1 | | |
| 36 | 534744010010 | | Chain | 1 | | **2900** |
| 36 | 532944010015 | | Chain | 1 | | **3200** |
| 36 | 534744010009 | | Chain | 1 | | **3600** |
| 37 | 534744010016 | 2 | Inner Mast(2900) | 1 | | |
| 37 | 534744010015 | 2 | Inner Mast(3200) | 1 | | |
| 37 | 534744010014 | 2 | Inner Mast(3600) | 1 | | |
| 38 | 940200300004 | | Compound Roller | 4 | | |
| 39 | 910600600006 | 1 | Cotter Pin | 2 | | |
| 40 | 941100800012 | | Pin | 2 | | |
| 41 | 532644520038 | | Chain Anchor | 2 | | |
| 42 | 910600600023 | 1 | Cotter Pin | 2 | | |
| 43 | 910300200008 | 1 | Nut | 4 | | |

## 02 Two-stage mast full free lift (535946043501)

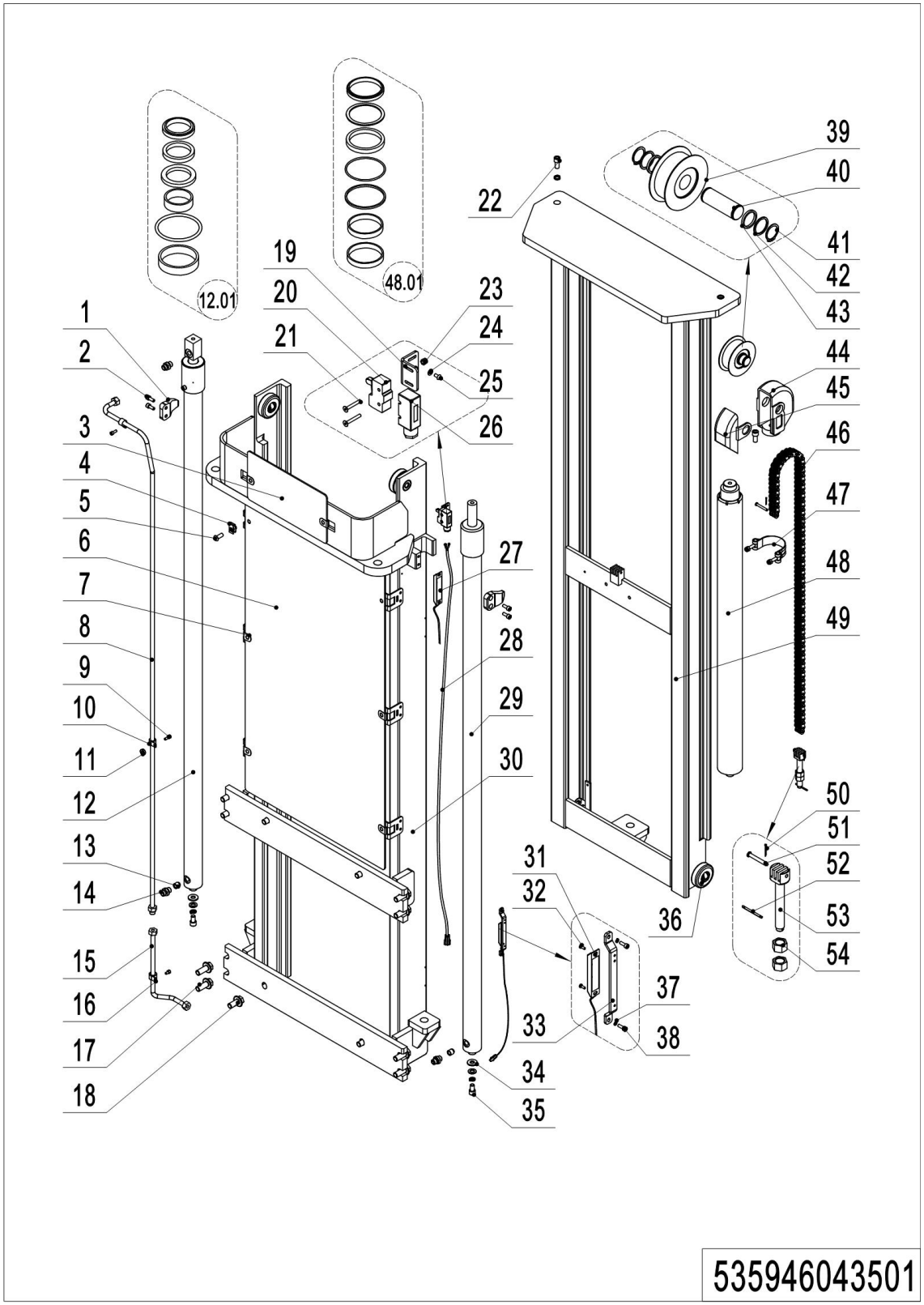

## 02 Two-stage mast full free lift (535946043501)

| No. | Item Code | Mark | Item Description | Qty. | Substitute | Note |
|---|---|---|---|---|---|---|
| 1 | 275044020076 | | Fixing Plate | 2 | | |
| 2 | 910200200057 | 1 | Screw | 4 | | |
| 3 | 534744520037 | | Guard Plate | 1 | | |
| 4 | 940400400003 | | Cage Nut | 2 | | |
| 5 | 941100100005 | 1 | Screw | 2 | | |
| 6 | 534744020011 | | Guard Plate | 1 | | **2900** |
| 6 | 534744520038 | | Guard Plate | 1 | | **3200** |
| 6 | 534744020006 | | Guard Plate | 1 | | **3600** |
| 7 | 940400300001 | | Spring Buckle | 4 | | |
| 7 | 940400300001 | | Spring Buckle | 6 | | |
| 8 | 534743510017 | | Steel Tube | 1 | | **2900** |
| 8 | 534743510016 | | Steel Tube | 1 | | **3200** |
| 8 | 534743510015 | | Steel Tube | 1 | | **3600** |
| 9 | 910200200035 | | Screw | 2 | | |
| 10 | 951000100001 | | Hose Clamp | 2 | | |
| 11 | 940600500001 | | Washer | 2 | | |
| 12 | 534743510008 | | Cylinder | 1 | | **2900** |
| 12 | 534743510007 | | Cylinder | 1 | | **3200** |
| 12 | 534743510006 | | Cylinder | 1 | | **3600** |
| 12.01 | 534798510002 | | Seal Kit | 2 | | **Also for cylinder 29** |
| 13 | 950600300001 | | Safety Valve | 3 | | |
| 14 | 950400400003 | | Joint | 4 | | |
| 15 | 534743510018 | | Steel Tube | 1 | | |
| 16 | 951000100003 | | Hose Clamp | 1 | | |
| 17 | 910100800006 | | Bolt | 8 | | |
| 18 | 910100800005 | | Bolt | 4 | | |
| 19 | 534744520036 | | Fixing Plate | 1 | | |
| 20 | 920200300001 | | Microswitch | 1 | | |
| 21 | 910200400007 | 1 | Screw | 2 | | |
| 22 | 910200200097 | 1 | Screw | 3 | | |

---

**1= Supply as package. 2= Supply with constraints. 3= Phasing-out supply. 4= Supply as assembly. 5= Check other tables.**

## 02 Two-stage Mast Full Free Lift (535946043501) Continuation 1

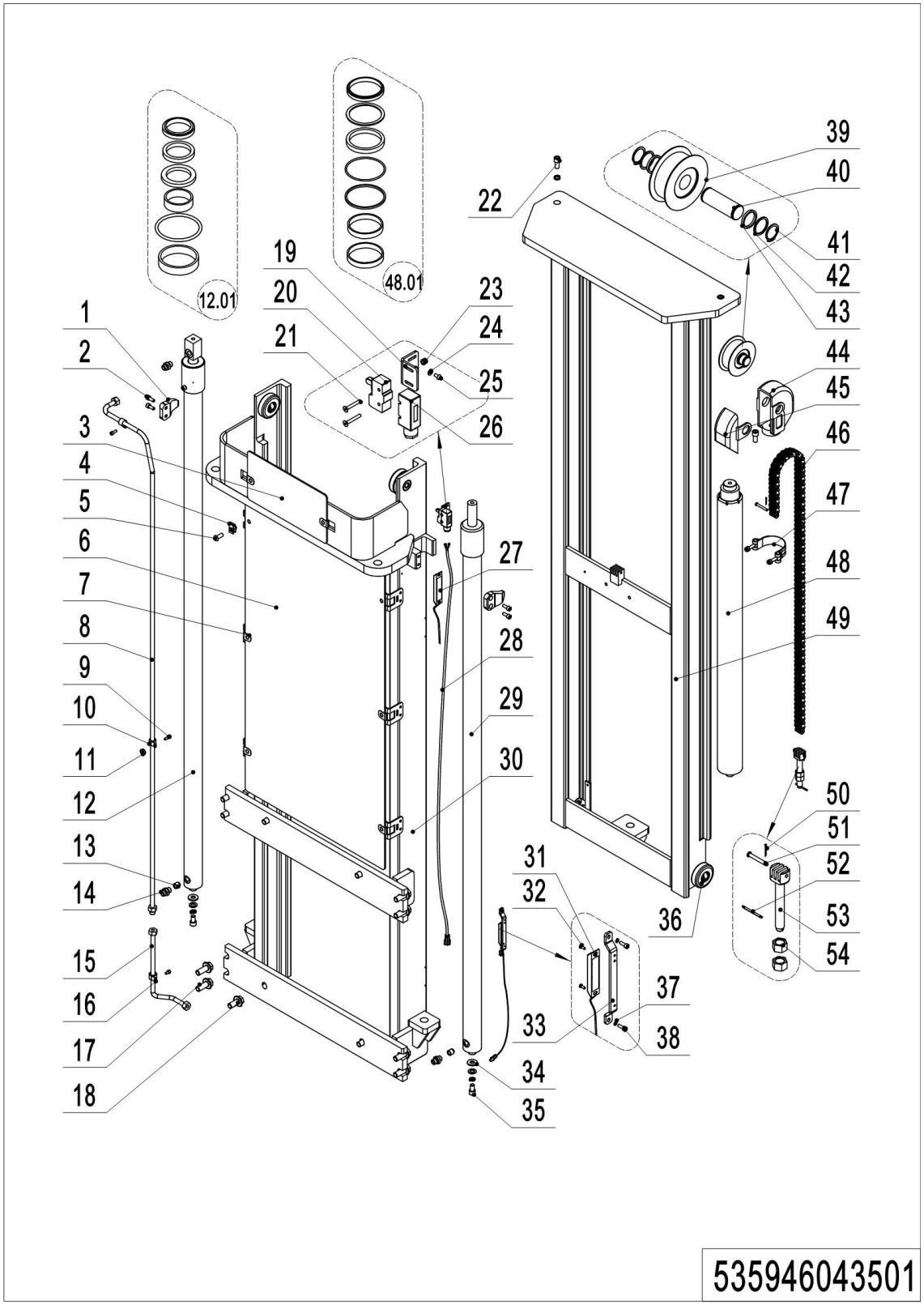

## 02 Two-stage Mast Full Free Lift (535946043501) Continuation 1

| No. | Item Code | Mark | Item Description | Qty. | Substitute | Note |
|---|---|---|---|---|---|---|
| 23 | 910300500001 | 1 | Nut | 2 | | |
| 24 | 910400100003 | 1 | Flat Washer | 2 | | |
| 25 | 910200300005 | 1 | Screw | 2 | | |
| 26 | 920200300008 | | Protective Cover | 1 | | |
| 27 | 535933510013 | | Switch | 1 | | **2900** |
| 27 | 535933510014 | | Switch | 1 | | **3200** |
| 27 | 535933510016 | | Switch | 1 | | **3600** |
| 27 | 535933510021 | | Switch | 1 | | **EN1175-2020** |
| 28 | 535933510025 | | Wire Harness | 1 | | |
| 29 | 534743510014 | | Cylinder | 1 | | **2900** |
| 29 | 534743510013 | | Cylinder | 1 | | **3200** |
| 29 | 534743510012 | | Cylinder | 1 | | **3600** |
| 30 | 534743510022 | 2 | Outer Mast(2900) | 1 | | |
| 30 | 534743510021 | 2 | Outer Mast(3200) | 1 | | |
| 30 | 534743510020 | 2 | Outer Mast(3600) | 1 | | |
| 31 | 535933510005 | 3 | Switch | 1 | | |
| 31 | 535933510020 | | Switch | 1 | | **EN1175-2020** |
| 32 | 910200500010 | 1 | Screw | 4 | | |
| 32 | 910200500021 | 1 | Screw | 4 | | |
| 33 | 534744520059 | 3 | Protective Cover | 2 | | |
| 33 | 534744520080 | | Protective Cover | 2 | | **EN1175-2020** |
| 34 | 534744520015 | | Subplate | 2 | | |
| 35 | 910200200096 | 1 | Screw | 2 | | |
| 36 | 940200300004 | | Compound Roller | 4 | | |
| 37 | 910400500003 | 1 | Spring Washer | 4 | | |
| 38 | 910200300006 | 1 | Screw | 4 | | |
| 39 | 940200500010 | | Sprocket Bearing | 1 | | |
| 40 | 532644520037 | | Axle | 1 | | |
| 41 | 910401300016 | | Circlip | 2 | | |
| 42 | 940600500008 | 1 | Washer | 2 | | |

## 02 Two-stage Mast Full Free Lift (535946043501) Continuation 2

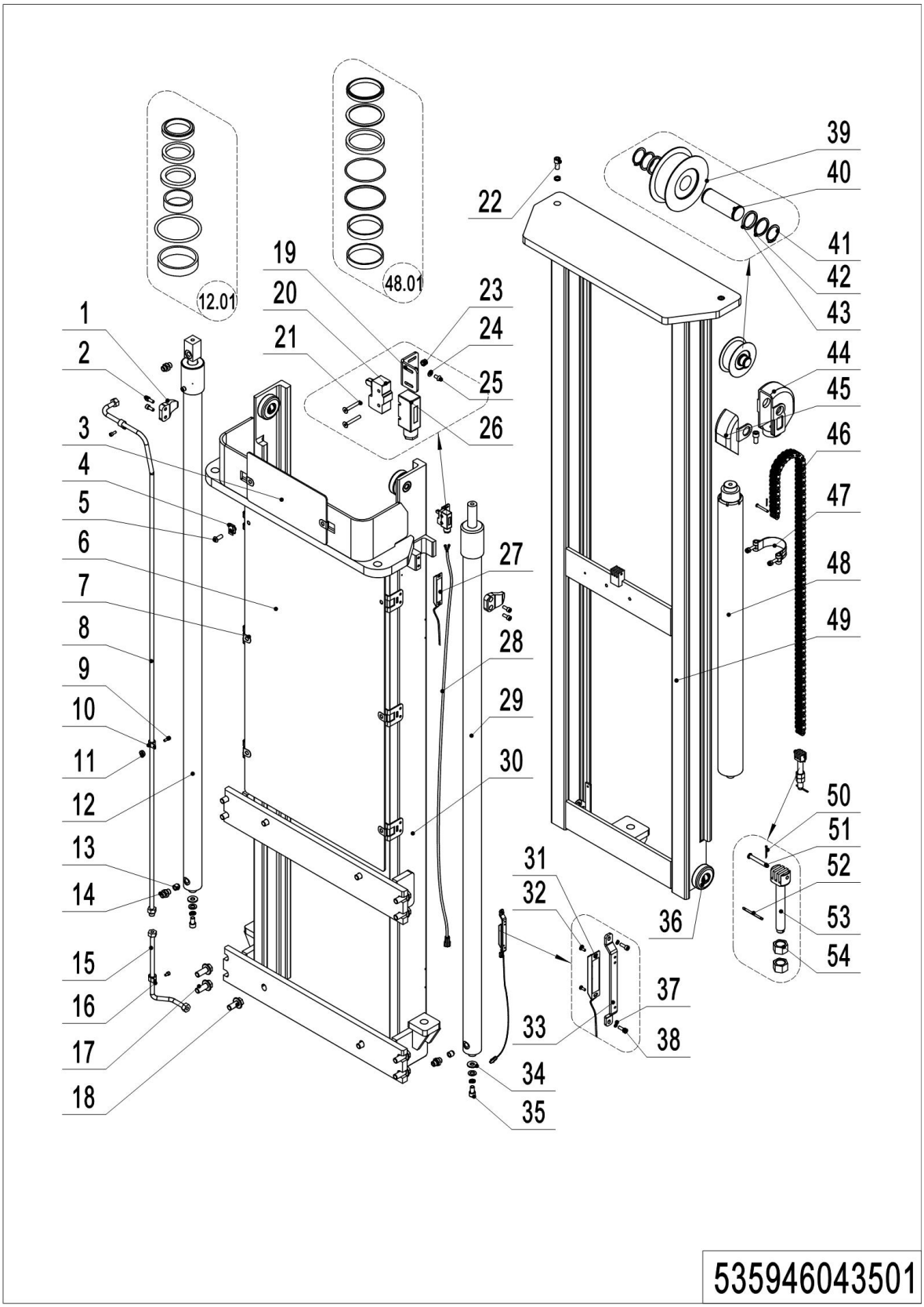


---

**1= Supply as package. 2= Supply with constraints. 3= Phasing-out supply. 4= Supply as assembly. 5= Check other tables.**

## 02 Two-stage Mast Full Free Lift (535946043501) Continuation 2

| No. | Item Code | Mark | Item Description | Qty. | Substitute | Note |
|---|---|---|---|---|---|---|
| 43 | 940600500009 | | Washer | 2 | | |
| 44 | 532644520035 | | Yoke | 1 | | |
| 45 | 532644520036 | | Side Cover | 1 | | |
| 46 | 532644510077 | | Chain | 1 | | **2900** |
| 46 | 532644510083 | | Chain | 1 | | **3200** |
| 46 | 532644510073 | | Chain | 1 | | **3600** |
| 47 | 940800600002 | | Hoop | 1 | | |
| 48 | 534743510011 | | Cylinder | 1 | | **2900** |
| 48 | 534743510010 | | Cylinder | 1 | | **3200** |
| 48 | 534743510009 | | Cylinder | 1 | | **3600** |
| 48.01 | 534798510003 | | Seal Kit | 1 | | |
| 49 | 534743510025 | 2 | Inner Mast(2900) | 1 | | |
| 49 | 534743510024 | 2 | Inner Mast(3200) | 1 | | |
| 49 | 534743510023 | 2 | Inner Mast(3600) | 1 | | |
| 50 | 910600600006 | 1 | Cotter Pin | 2 | | |
| 51 | 941100800012 | | Pin | 2 | | |
| 52 | 910600600023 | 1 | Cotter Pin | 1 | | |
| 53 | 532644520038 | | Chain Anchor | 1 | | |
| 54 | 910300200008 | 1 | Nut | 2 | | |

## 03 Triple Mast Standard Lift (535946045001)

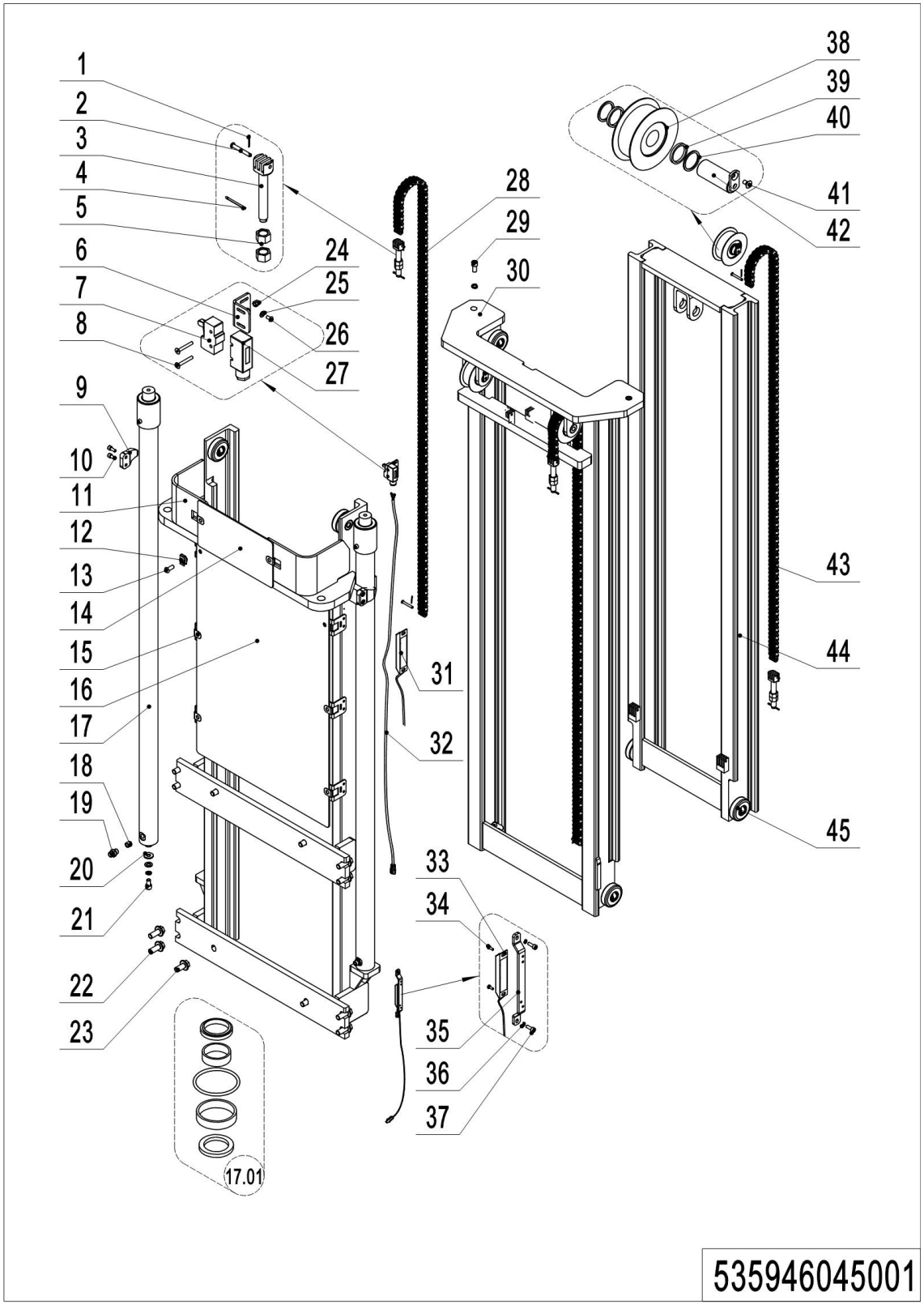

## 03 Triple Mast Standard Lift (535946045001)

| No. | Item Code | Mark | Item Description | Qty. | Substitute | Note |
|---|---|---|---|---|---|---|
| 1 | 910600600006 | 1 | Cotter Pin | 6 | | |
| 2 | 941100800006 | 3 | Pin | 6 | | |
| 2 | 941100800012 | | Pin | 6 | | |
| 3 | 532644520038 | | Chain Anchor | 3 | | |
| 4 | 910600600023 | | Cotter Pin | 3 | | |
| 5 | 910300200008 | 1 | Nut | 6 | | |
| 6 | 534744520036 | | Fixing Plate | 1 | | |
| 7 | 920200300001 | | Microswitch | 1 | | |
| 8 | 910200400007 | 1 | Screw | 2 | | |
| 9 | 275044020076 | | Fixing Plate | 2 | | |
| 10 | 910200200057 | 1 | Screw | 4 | | |
| 11 | 534745010012 | 2 | Outer Mast(4300) | 1 | | |
| 11 | 534745010010 | 2 | Outer Mast(4600) | 1 | | |
| 12 | 940400400003 | | Cage Nut | 2 | | |
| 13 | 941100100005 | 1 | Screw | 2 | | |
| 14 | 534744520037 | | Guard Plate | 1 | | |
| 15 | 940400300001 | | Spring Buckle | 6 | | |
| 16 | 534744520039 | | Guard Plate | 1 | | **4300** |
| 16 | 534744520038 | | Guard Plate | 1 | | **4600** |
| 17 | 534745010007 | | Cylinder | 2 | | **4300** |
| 17 | 534745010006 | | Cylinder | 2 | | **4600** |
| 17.01 | 534798510004 | | Seal Kit | 2 | | |
| 18 | 950600300001 | | Safety Valve | 2 | | |
| 19 | 950400400003 | | Joint | 2 | | |
| 20 | 534744520015 | | Subplate | 2 | | |
| 21 | 910200200096 | 1 | Screw | 2 | | |
| 22 | 910100800006 | | Bolt | 8 | | |
| 23 | 910100800005 | | Bolt | 4 | | |
| 24 | 910300500001 | 1 | Nut | 2 | | |
| 25 | 910400100003 | 1 | Flat Washer | 2 | | |

---

**1= Supply as package. 2= Supply with constraints. 3= Phasing-out supply. 4= Supply as assembly. 5= Check other tables.**

## 03 Triple Mast Standard Lift (535946045001) Continuation

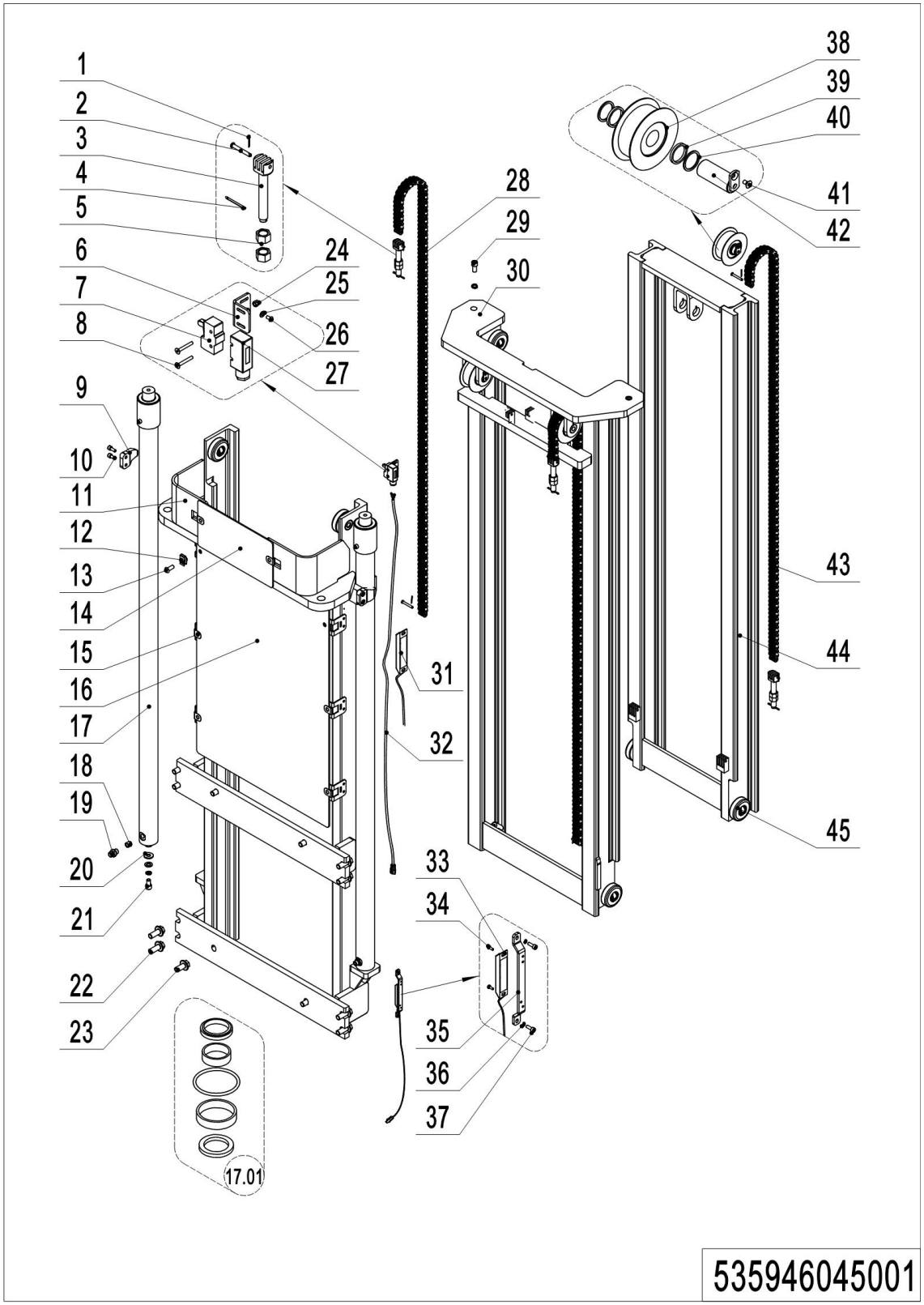

## 03 Triple Mast Standard Lift (535946045001) Continuation

| No. | Item Code | Mark | Item Description | Qty. | Substitute | Note |
|---|---|---|---|---|---|---|
| 26 | 910200300005 | 1 | Screw | 2 | | |
| 27 | 920200300008 | | Protective Cover | 1 | | |
| 28 | 534745010009 | | Chain | 2 | | **4300** |
| 28 | 534145010005 | | Chain | 2 | | **4600** |
| 29 | 910200200097 | | Screw | 2 | | |
| 30 | 534745010013 | 2 | Middle Mast(4300) | 1 | | |
| 30 | 534745010011 | 2 | Middle Mast(4600) | 1 | | |
| 31 | 535933510013 | | Switch | 1 | | **4300** |
| 31 | 535933510014 | | Switch | 1 | | **4600** |
| 31 | 535933510021 | | Switch | 1 | | **EN1175-2020** |
| 32 | 535933510025 | | Wire Harness | 1 | | **EN1175-2020** |
| 33 | 535933510005 | | Switch | 1 | | |
| 33 | 535933510020 | | Switch | 1 | | **EN1175-2020** |
| 34 | 910200500010 | 1 | Screw | 4 | | |
| 34 | 910200500021 | 1 | Screw | 4 | | **EN1175-2020** |
| 35 | 534744520059 | | Protective Cover | 2 | | |
| 35 | 534744520080 | | Protective Cover | 2 | | **EN1175-2020** |
| 36 | 910400500003 | 1 | Spring Washer | 4 | | |
| 37 | 910200200014 | 1 | Screw | 4 | | |
| 38 | 940200500010 | | Sprocket Bearing | 3 | | |
| 39 | 940600500009 | 1 | Washer | 6 | | |
| 40 | 940600500008 | 1 | Washer | 6 | | |
| 41 | 910200400016 | 1 | Screw | 3 | | |
| 42 | 535045010008 | | Pin | 3 | | |
| 43 | 535044510020 | | Chain | 1 | | **4300** |
| 43 | 534745010008 | | Chain | 1 | | **4600** |
| 44 | 534745010005 | | Inner Mast(4300) | 1 | | **4300** |
| 44 | 534745010004 | | Inner Mast(4600) | 1 | | **4600** |
| 45 | 940200300004 | | Compound Roller | 8 | | |

## 04 Triple Mast Full Free Lift (535946044501)

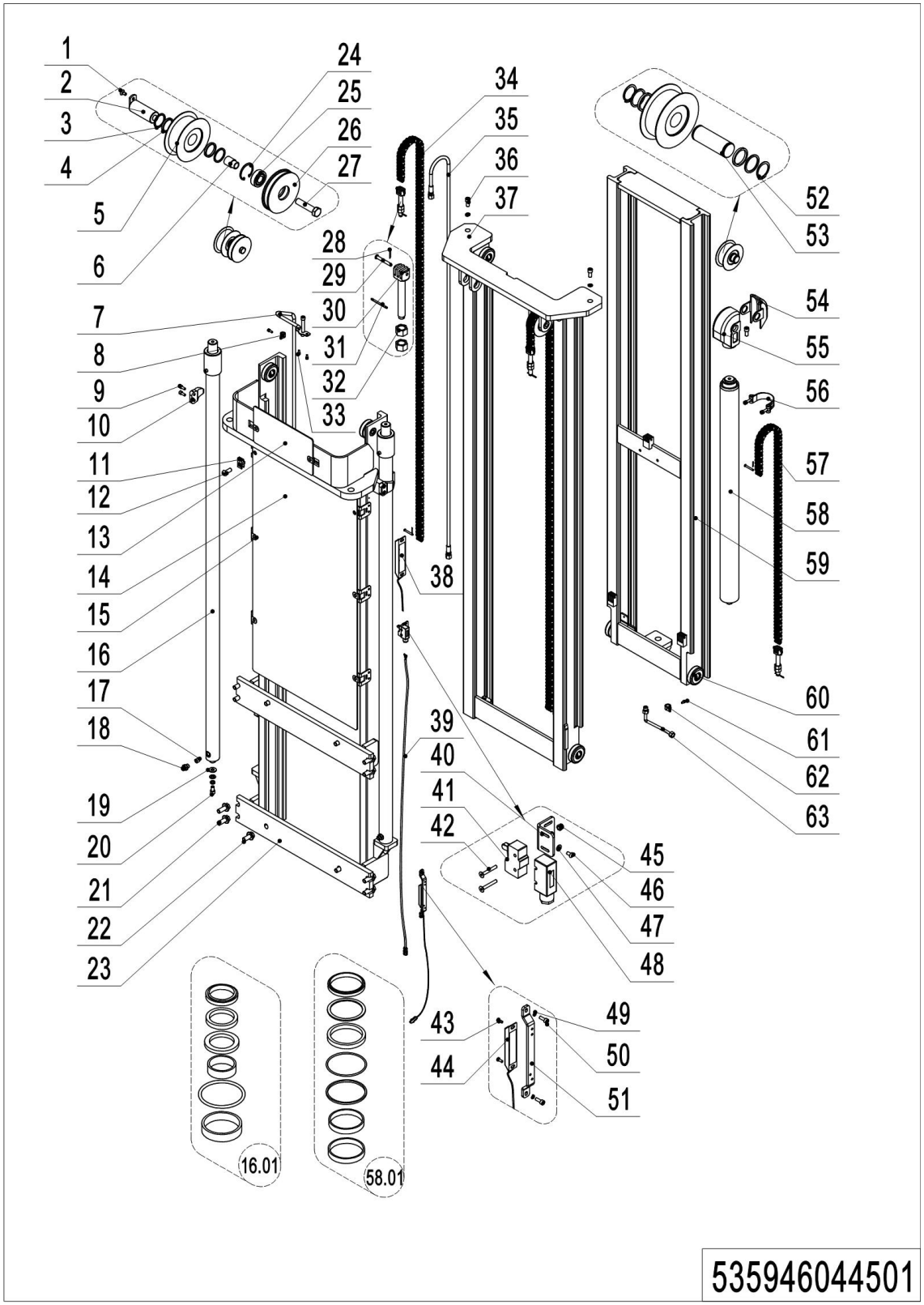

## 04 Triple Mast Full Free Lift (535946044501)

| No. | Item Code | Mark | Item Description | Qty. | Substitute | Note |
|---|---|---|---|---|---|---|
| 1 | 910200400016 | 1 | Screw | 2 | | |
| 2 | 533544510006 | | Pin | 2 | | |
| 3 | 940600500009 | | Washer | 6 | | |
| 4 | 940600500008 | | Washer | 6 | | |
| 5 | 940200500010 | | Sprocket Bearing | 3 | | |
| 6 | 535944520001 | | Sleeve | 1 | | |
| 7 | 534744520074 | | Steel Tube | 1 | | **3400** |
| 7 | 534744510023 | | Steel Tube | 1 | | **4000** |
| 7 | 534744510021 | | Steel Tube | 1 | | **4300** |
| 7 | 534744510020 | | Steel Tube | 1 | | **4600** |
| 7 | 534744510022 | | Steel Tube | 1 | | **5300** |
| 7 | 534744520045 | | Steel Tube | 1 | | **5500** |
| 8 | 951000100001 | | Hose Clamp | 2 | | |
| 9 | 910200200057 | 1 | Screw | 4 | | |
| 10 | 275044020076 | | Fixing Plate | 2 | | |
| 11 | 940400400003 | | Cage Nut | 2 | | |
| 12 | 941100100005 | | Screw | 2 | | |
| 13 | 534744520037 | | Guard Plate | 1 | | |
| 14 | 534744520072 | | Guard Plate | 1 | | **3400** |
| 14 | 534744520041 | | Guard Plate | 1 | | **4000** |
| 14 | 534744520039 | | Guard Plate | 1 | | **4300** |
| 14 | 534744520038 | | Guard Plate | 1 | | **4600** |
| 14 | 534744520040 | | Guard Plate | 1 | | **5300** |
| 14 | 534744520052 | | Guard Plate | 1 | | **5500** |
| 15 | 940400300001 | 1 | Spring Buckle | 4 | | |
| 15 | 940400300001 | 1 | Spring Buckle | 6 | | |
| 16 | 534744510044 | | Cylinder | 2 | | **3400** |
| 16 | 534744510019 | | Cylinder | 2 | | **4000** |
| 16 | 534744510017 | | Cylinder | 2 | | **4300** |
| 16 | 534744510016 | | Cylinder | 2 | | **4600** |

## 04 Triple Mast Full Free Lift (535946044501) Continuation 1

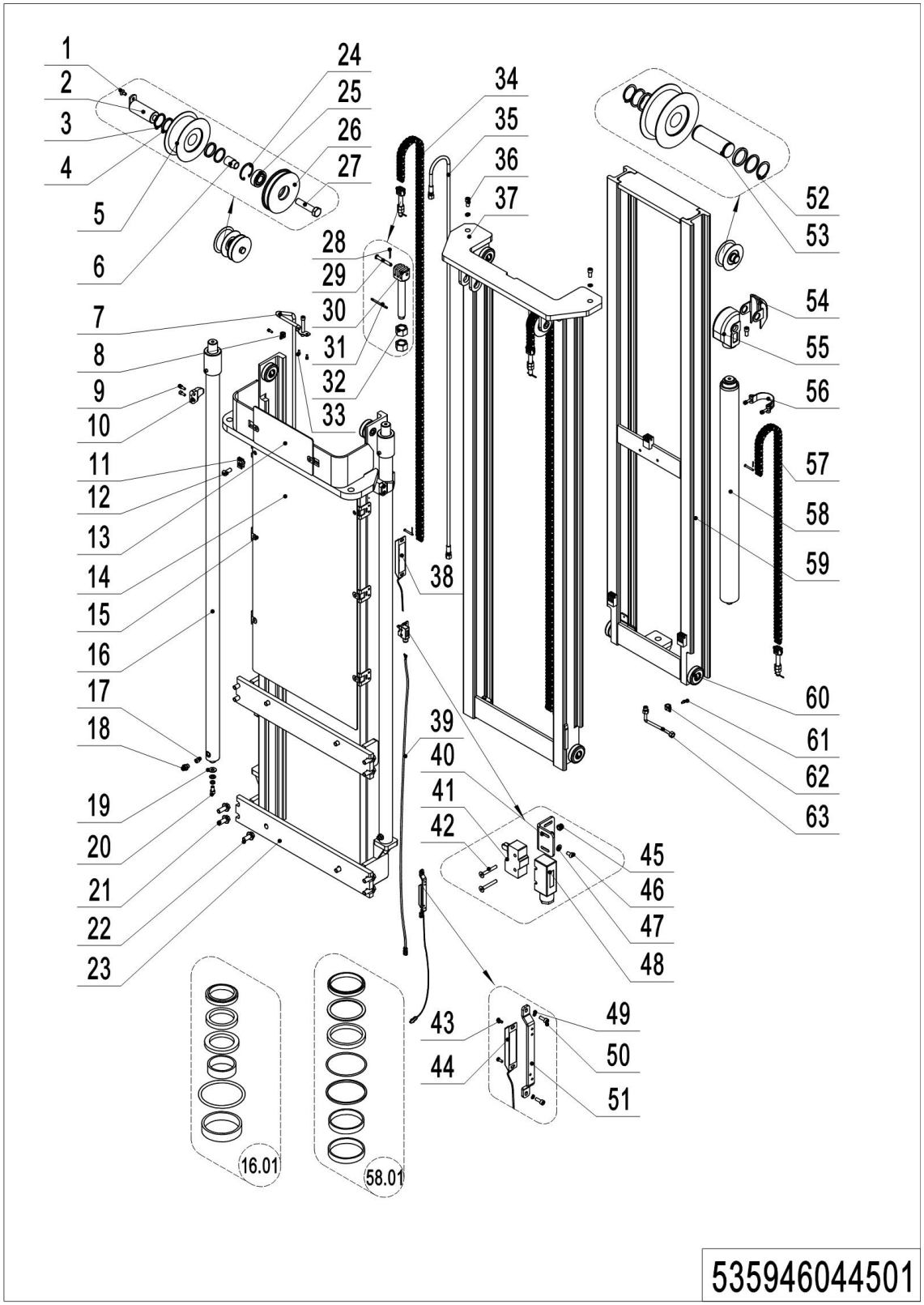

## 04 Triple Mast Full Free Lift (535946044501) Continuation 1

| No. | Item Code | Mark | Item Description | Qty. | Substitute | Note |
|---|---|---|---|---|---|---|
| 16 | 534744510018 | | Cylinder | 2 | | **5300** |
| 16 | 534744510028 | | Cylinder | 2 | | **5500** |
| 16.01 | 534798510000 | | Seal Kit | 2 | | |
| 17 | 950600300001 | | Safety Valve | 3 | | |
| 18 | 950400400003 | | Joint | 3 | | |
| 19 | 534744520015 | | Subplate | 2 | | |
| 20 | 910200200096 | 1 | Screw | 2 | | |
| 21 | 910100800006 | 1 | Bolt | 8 | | |
| 22 | 910100800005 | 1 | Bolt | 4 | | |
| 23 | 534744510041 | 2 | Outer Mast(3400) | 1 | | |
| 23 | 534744510039 | 2 | Outer Mast(4000) | 1 | | |
| 23 | 534744510037 | 2 | Outer Mast(4300) | 1 | | |
| 23 | 534744510030 | 2 | Outer Mast(4600) | 1 | | |
| 23 | 534744510035 | 2 | Outer Mast(5300) | 1 | | |
| 23 | 534744510032 | 2 | Outer Mast(5500) | 1 | | |
| 24 | 910401400013 | 1 | Circlip | 1 | | |
| 25 | 910700200019 | | Bearing | 1 | | |
| 26 | 535944520000 | | Pulley | 1 | | |
| 27 | 910100100073 | 1 | Bolt | 1 | | |
| 28 | 910600600006 | 1 | Cotter Pin | 6 | | |
| 29 | 941100800006 | 3 | Pin | 6 | | |
| 29 | 941100800012 | | Pin | 6 | | |
| 30 | 941300100008 | | Chain Bolt | 3 | | |
| 31 | 910600600023 | 1 | Cotter Pin | 3 | | |
| 32 | 910300200008 | 1 | Nut | 6 | | |
| 33 | 910200400006 | 1 | Screw | 2 | | |
| 34 | 532644510081 | | Chain | 2 | | **3400** |
| 34 | 534744510047 | | Chain | 2 | | **4000** |
| 34 | 534745010009 | | Chain | 2 | | **4300** |
| 34 | 534145010005 | | Chain | 2 | | **4600** |

---

**1= Supply as package. 2= Supply with constraints. 3= Phasing-out supply. 4= Supply as assembly. 5= Check other tables.**

## 04 Triple Mast Full Free Lift (535946044501) Continuation 2

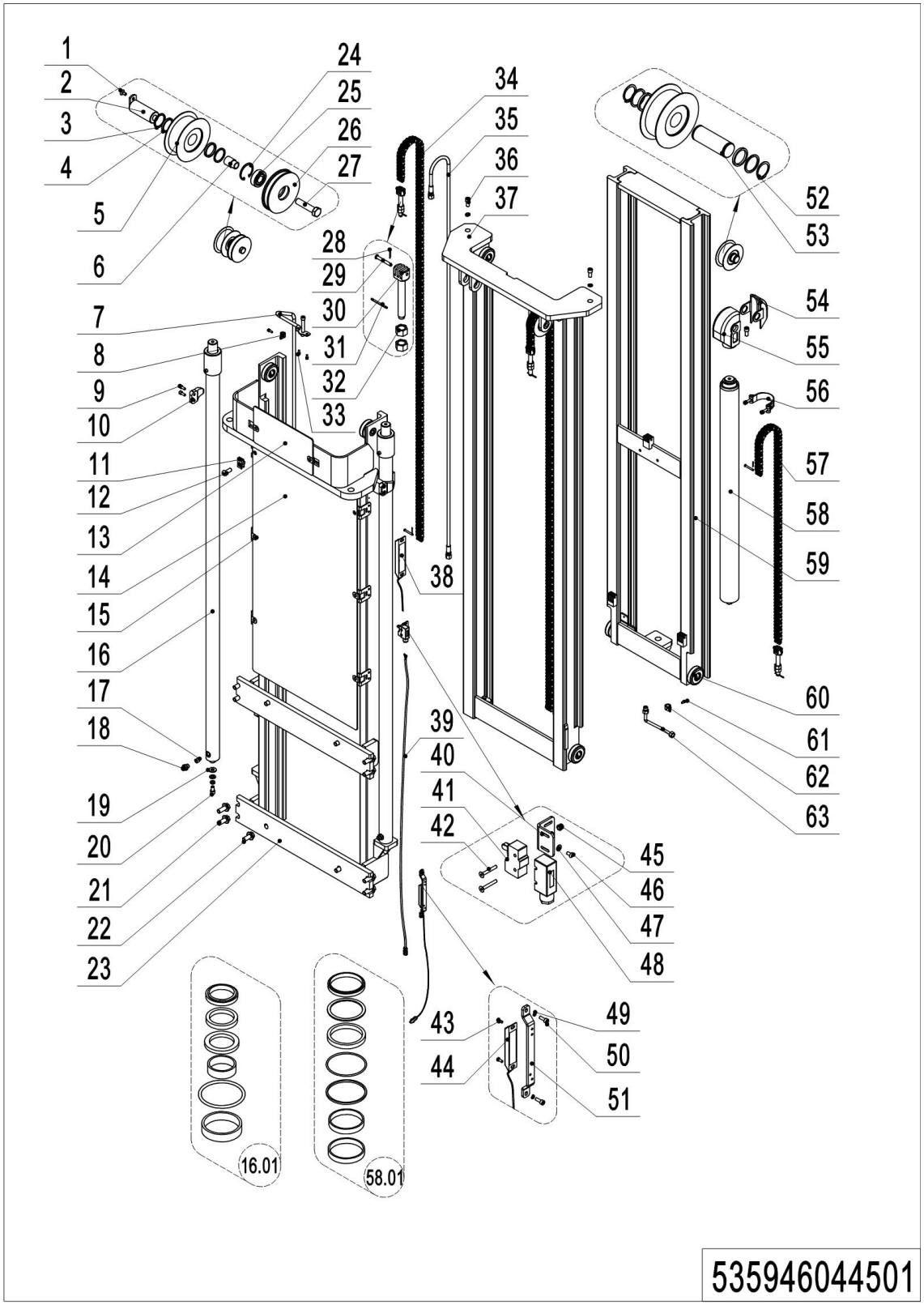

## 04 Triple Mast Full Free Lift (535946044501) Continuation 2

| No. | Item Code | Mark | Item Description | Qty. | Substitute | Note |
|---|---|---|---|---|---|---|
| 34 | 534744010009 | | Chain | 2 | | **5300** |
| 34 | 535044510031 | | Chain | 2 | | **5500** |
| 34 | 534744520073 | | Hose | 1 | | **3400** |
| 35 | 534744520043 | | Hose | 1 | | **4000** |
| 35 | 532644520143 | | Hose | 1 | | **4300** |
| 35 | 532644520144 | | Hose | 1 | | **4600** |
| 35 | 534744520050 | | Hose | 1 | | **5300** |
| 35 | 534744520044 | | Hose | 1 | | **5500** |
| 36 | 910200200097 | 1 | Screw | 3 | | |
| 37 | 534744510042 | 2 | Middle Mast(3400) | 1 | | |
| 37 | 534744510040 | 2 | Middle Mast(4000) | 1 | | |
| 37 | 534744510038 | 2 | Middle Mast(4300) | 1 | | |
| 37 | 534744510031 | 2 | Middle Mast(4600) | 1 | | |
| 37 | 534744510036 | 2 | Middle Mast(5300) | 1 | | |
| 37 | 534744510033 | 2 | Middle Mast(5500) | 1 | | |
| 37 | 535933510018 | | Switch | 1 | | **3400** |
| 38 | 535933510012 | | Switch | 1 | | **4000** |
| 38 | 535933510013 | | Switch | 1 | | **4300** |
| 38 | 535933510014 | | Switch | 1 | | **4600** |
| 38 | 535933510016 | | Switch | 1 | | **5300** |
| 38 | 535933510017 | | Switch | 1 | | **5500** |
| 38 | 535933510021 | | Switch | 1 | | **EN1175-2020** |
| 39 | 535933510025 | | Wire Harness | 1 | | |
| 40 | 534744520036 | | Fixing Plate | 1 | | |
| 41 | 920200300001 | | Microswitch | 1 | | |
| 42 | 910200400007 | 1 | Screw | 4 | | |
| 43 | 910200500010 | 1 | Screw | 4 | | |
| 43 | 910200500021 | 1 | Screw | 4 | | **EN1175-2020** |
| 44 | 535933510005 | | Switch | 1 | | |
| 44 | 535933510020 | | Switch | 1 | | **EN1175-2020** |

## 04 Triple Mast Full Free Lift (535946044501) Continuation 3

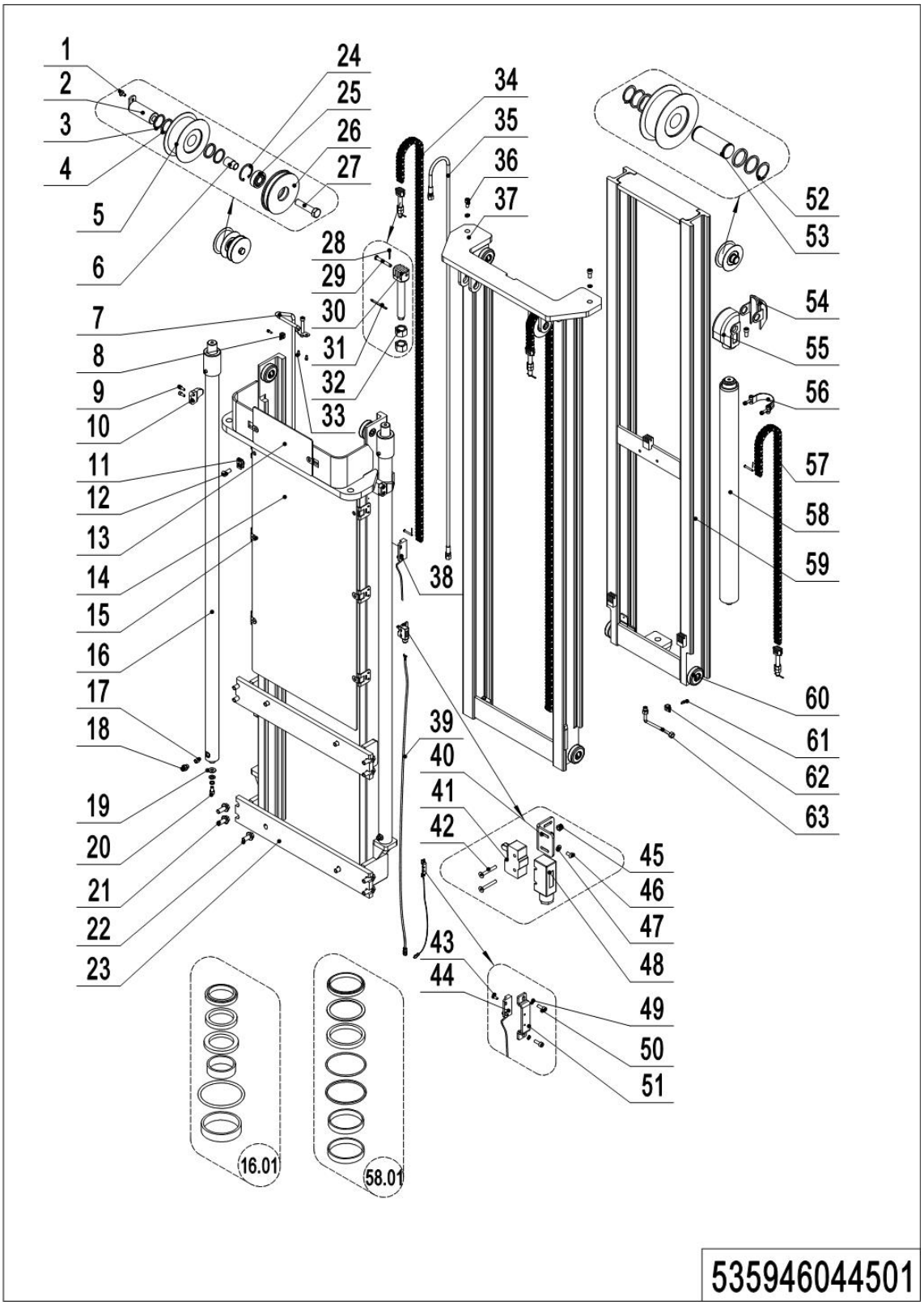

## 04 Triple Mast Full Free Lift (535946044501) Continuation 3

| No. | Item Code | Mark | Item Description | Qty. | Substitute | Note |
|---|---|---|---|---|---|---|
| 45 | 910300500001 | 1 | Nut | 4 | | |
| 46 | 910200300005 | 1 | Screw | 4 | | |
| 47 | 910400100003 | 1 | Flat Washer | 4 | | |
| 48 | 920200300008 | | Protective Cover | 1 | | |
| 49 | 910400500003 | | Spring Washer | 4 | | |
| 50 | 910200200014 | 1 | Screw | 4 | | |
| 51 | 534744520059 | | Protective Cover | 2 | | |
| 51 | 534744520080 | | Protective Cover | 2 | | **EN1175-2020** |
| 52 | 910401300016 | 1 | Circlip | 2 | | |
| 53 | 532644520037 | | Axle | 1 | | |
| 54 | 532644520036 | | Side Cover | 1 | | |
| 55 | 532644520035 | | Yoke | 1 | | |
| 56 | 940800600002 | | Hoop | 1 | | |
| 57 | 534744510046 | | Chain | 1 | | 3400 |
| 57 | 532644510075 | | Chain | 1 | | 4000 |
| 57 | 532644510077 | | Chain | 1 | | 4300 |
| 57 | 251044510096 | | Chain | 1 | | 4600 |
| 57 | 532644510073 | | Chain | 1 | | 5300 |
| 57 | 535944510000 | | Chain | 1 | | 5500 |
| 58 | 534744510045 | | Cylinder | 1 | | 3400 |
| 58 | 534744510015 | | Cylinder | 1 | | 4000 |
| 58 | 534744510013 | | Cylinder | 1 | | 4300 |
| 58 | 534744510012 | | Cylinder | 1 | | 4600 |
| 58 | 534744510014 | | Cylinder | 1 | | 5300 |
| 58 | 534744510029 | | Cylinder | 1 | | 5500 |
| 58.01 | 534798510001 | | Seal Kit | 1 | | |
| 59 | 534744510043 | 2 | Inner Mast(3400) | 1 | | 3400 |
| 59 | 534744510011 | 2 | Inner Mast(4000) | 1 | | 4000 |
| 59 | 534744510009 | 2 | Inner Mast(4300) | 1 | | 4300 |
| 59 | 534744510008 | 2 | Inner Mast(4600) | 1 | | 4600 |

## 04 Triple Mast Full Free Lift (535946044501) Continuation 4

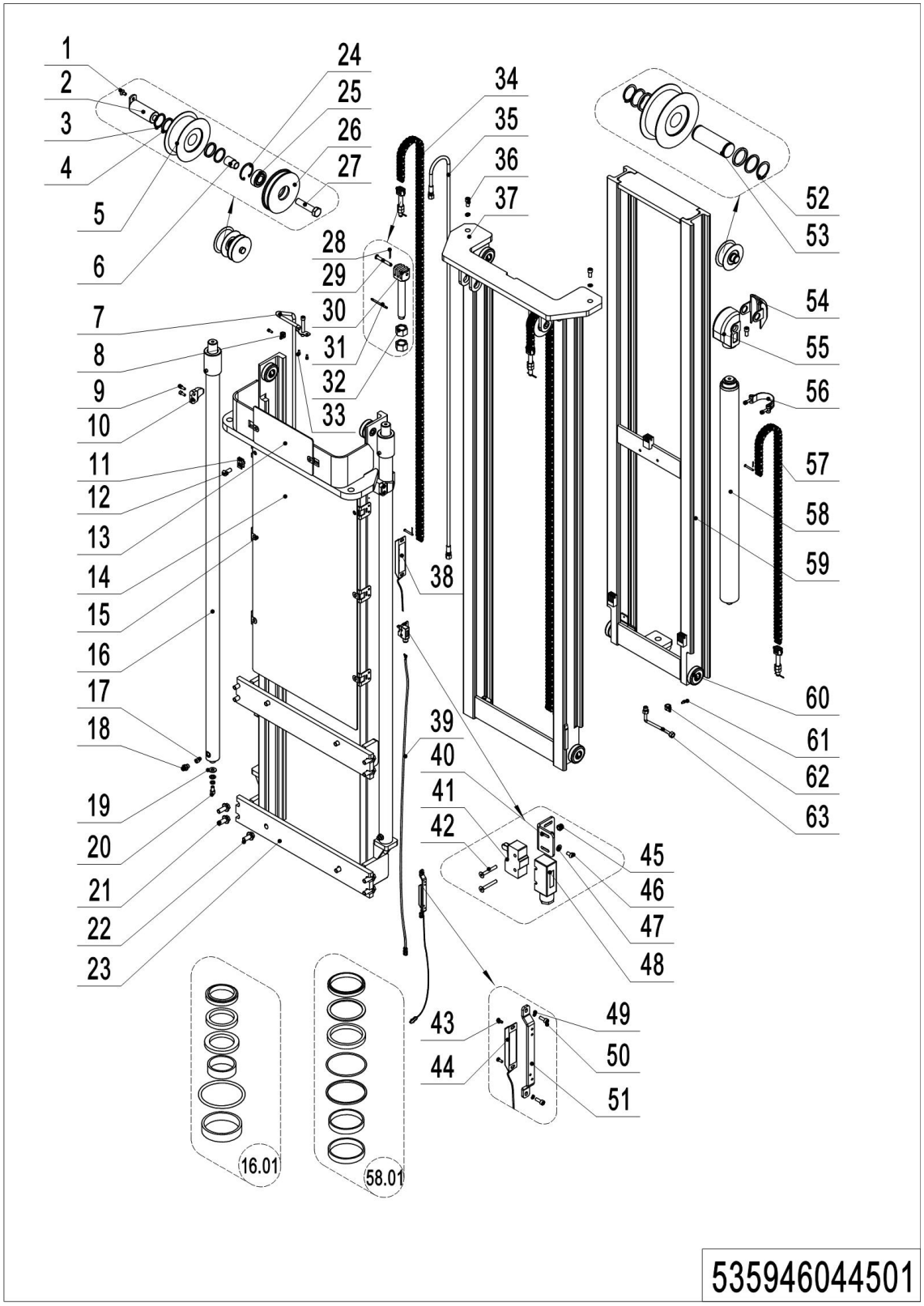

## 04 Triple Mast Full Free Lift (535946044501) Continuation 4

| No. | Item Code | Mark | Item Description | Qty. | Substitute | Note |
|---|---|---|---|---|---|---|
| 59 | 534744510010 | 2 | Inner Mast(5300) | 1 | | 5300 |
| 59 | 534744510034 | 2 | Inner Mast(5500) | 1 | | 5500 |
| 60 | 940200300004 | | Compound Roller | 8 | | |
| 61 | 910200200032 | 1 | Screw | 1 | | |
| 62 | 951000100003 | | Hose Clamp | 1 | | |
| 63 | 533544520006 | | Steel Tube | 1 | | |

# Chapter 5: Steering System, Braking System, Wheels

## 01 Tiller Unit (535946011001)

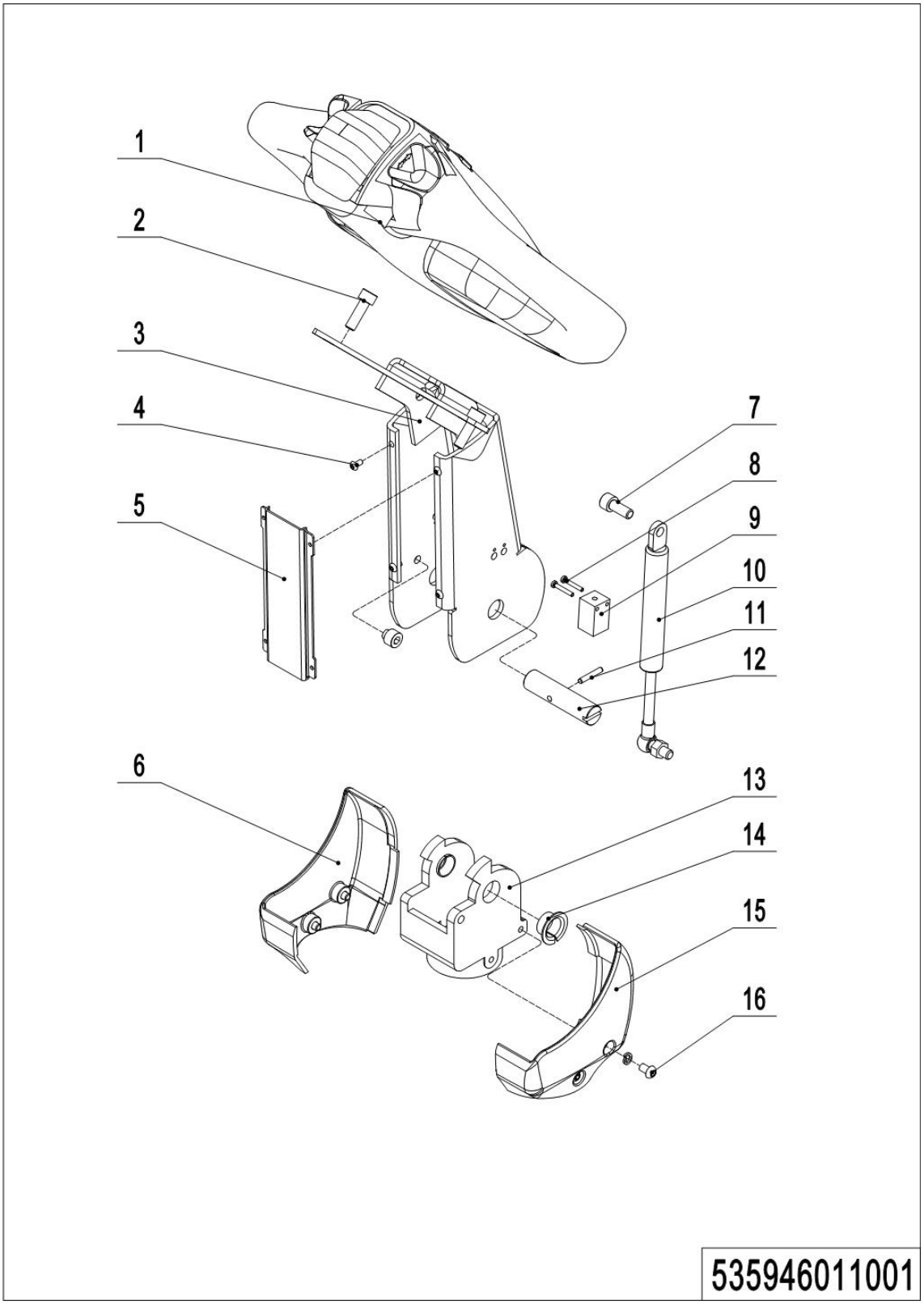

## 01 Tiller Unit (535946011001)

| No. | Item Code | Mark | Item Description | Qty. | Substitute | Note |
|---|---|---|---|---|---|---|
| 1 | 922100100001 | | Control Handle | 1 | | **See 535946011002** |
| 1 | 922100100099 | | Control Handle(EN1175-2020) | 1 | | **See 535946011003** |
| 2 | 910200200058 | 1 | Screw | 2 | | |
| 3 | 535911010000 | 2 | Tiller | 1 | | |
| 3 | 535911010001 | 2 | Tiller | 1 | | **Short tiller** |
| 4 | 910200300005 | 1 | Screw | 4 | | |
| 5 | 535911020003 | | Close Plate | 1 | | |
| 5 | 535911020008 | | Close Plate | 1 | | **Short tiller** |
| 6 | 535911020005 | | Protective Cover | 1 | | |
| 7 | 910200200057 | 1 | Screw | 1 | | |
| 8 | 910200500015 | 1 | Screw | 2 | | |
| 9 | 506733510002 | | Proximity Switch | 1 | | |
| 10 | 940400100001 | | Air Spring | 1 | | |
| 10 | 940400100045 | | Air Spring | 1 | | **Short tiller** |
| 11 | 910600400013 | | Spring Pin | 1 | | |
| 12 | 505611020008 | | Axle | 1 | | |
| 13 | 535911020004 | | Bracket | 1 | | |
| 13 | 535911020009 | | Bracket | 1 | | **Short tiller** |
| 14 | 940500200002 | | Bushing | 2 | | |
| 15 | 535911020006 | | Protective Cover | 1 | | |
| 16 | 910200300016 | 1 | Screw | 4 | | |

## 02 Control Handle (535946011002)

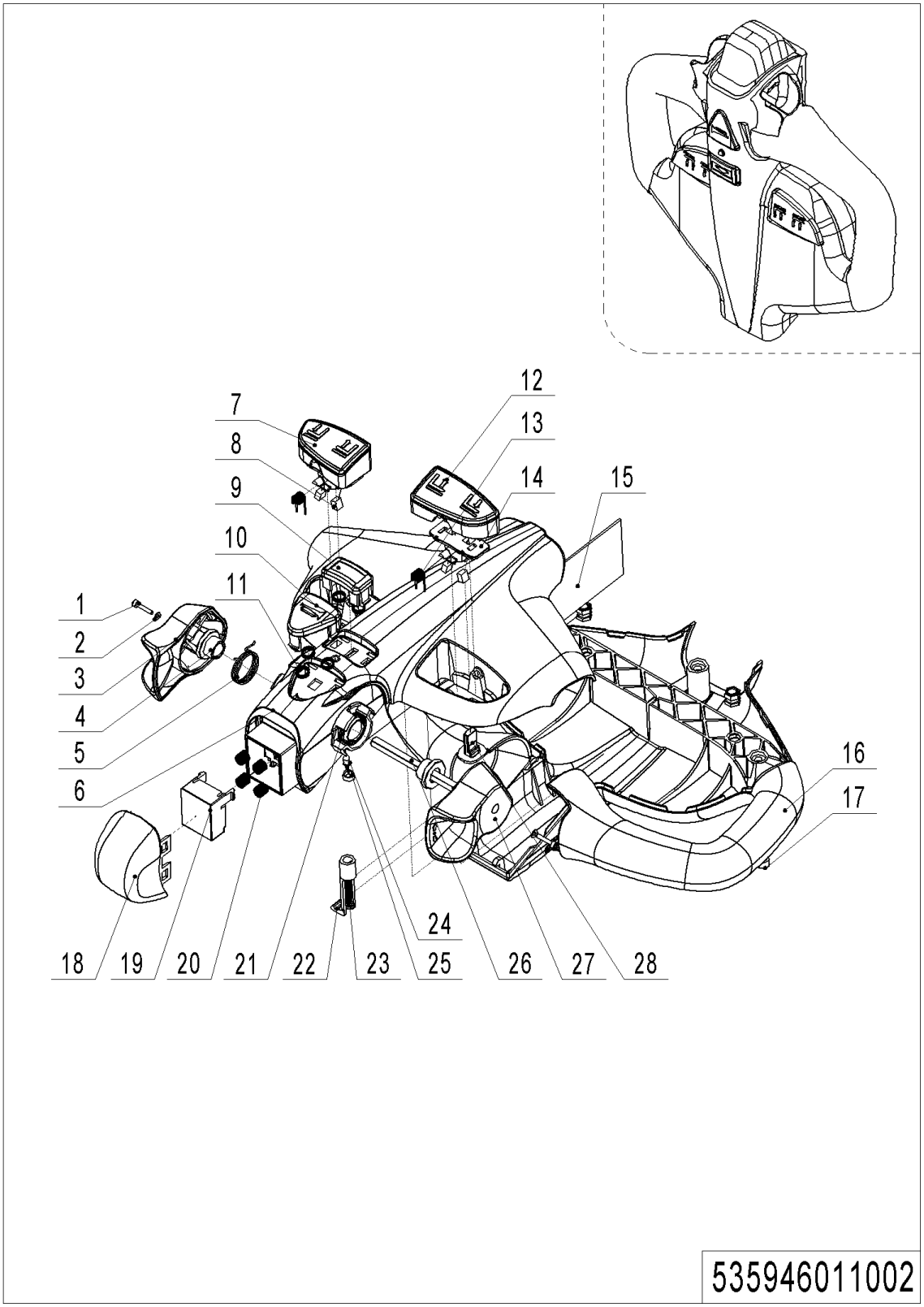

## 02 Control Handle (535946011002)

| No. | Item Code | Mark | Item Description | Qty. | Substitute | Note |
|---|---|---|---|---|---|---|
| -- | 922100100001 | | Control Handle | 1 | | |
| 1 | 505698520008 | | Screw | 2 | | |
| 2 | 505698520009 | | Washer | 2 | | |
| 3 | 505698520001 | | Traction lever | 1 | | |
| 4 | 505698520004 | | Sleeve | 2 | | |
| 5 | 505698520027 | | Torsional Spring | 1 | | |
| 6 | 505698520014 | | Handle Cap | 1 | | |
| 7 | 505698520016 | | Button cap | 1 | | |
| 8 | 505698520005 | | Magnet | 4 | | |
| 9 | 505698520021 | | Button Cap | 1 | | |
| 10 | 505698520002 | | Horn Button | 1 | | |
| 11 | 505698520003 | | Spring | 5 | | |
| 12 | 505698520022 | | Button Cap | 1 | | |
| 13 | 505698520018 | | Torsional Spring | 2 | | |
| 14 | 505698520017 | | Fixing Base | 2 | | |
| 15 | 505698520028 | | Circuit Board | 1 | | |
| 16 | 505698520015 | | Handle Cap | 1 | | |
| 17 | 505698520007 | | Screw | 3 | | |
| 18 | 505698520020 | | Button Cap | 1 | | |
| 19 | 505698520019 | | Pedestal | 1 | | |
| 20 | 505698520006 | | Spring | 4 | | |
| 21 | 505698520026 | | Torsional Spring | 1 | | |
| 22 | 505698520012 | | Clamp | 1 | | |
| 23 | 505698520023 | | Screw | 1 | | |
| 24 | 505698520024 | | Light | 1 | | |
| 25 | 505698520025 | | Lamp Holder | 1 | | |
| 26 | 505698520011 | | Axle-Traction lever | 1 | | |
| 27 | 505698520010 | | Traction lever | 1 | | |
| 28 | 505698520013 | | Sensor | 2 | | |

## 03 Control Handle (EN1175-2020)(535946011010)

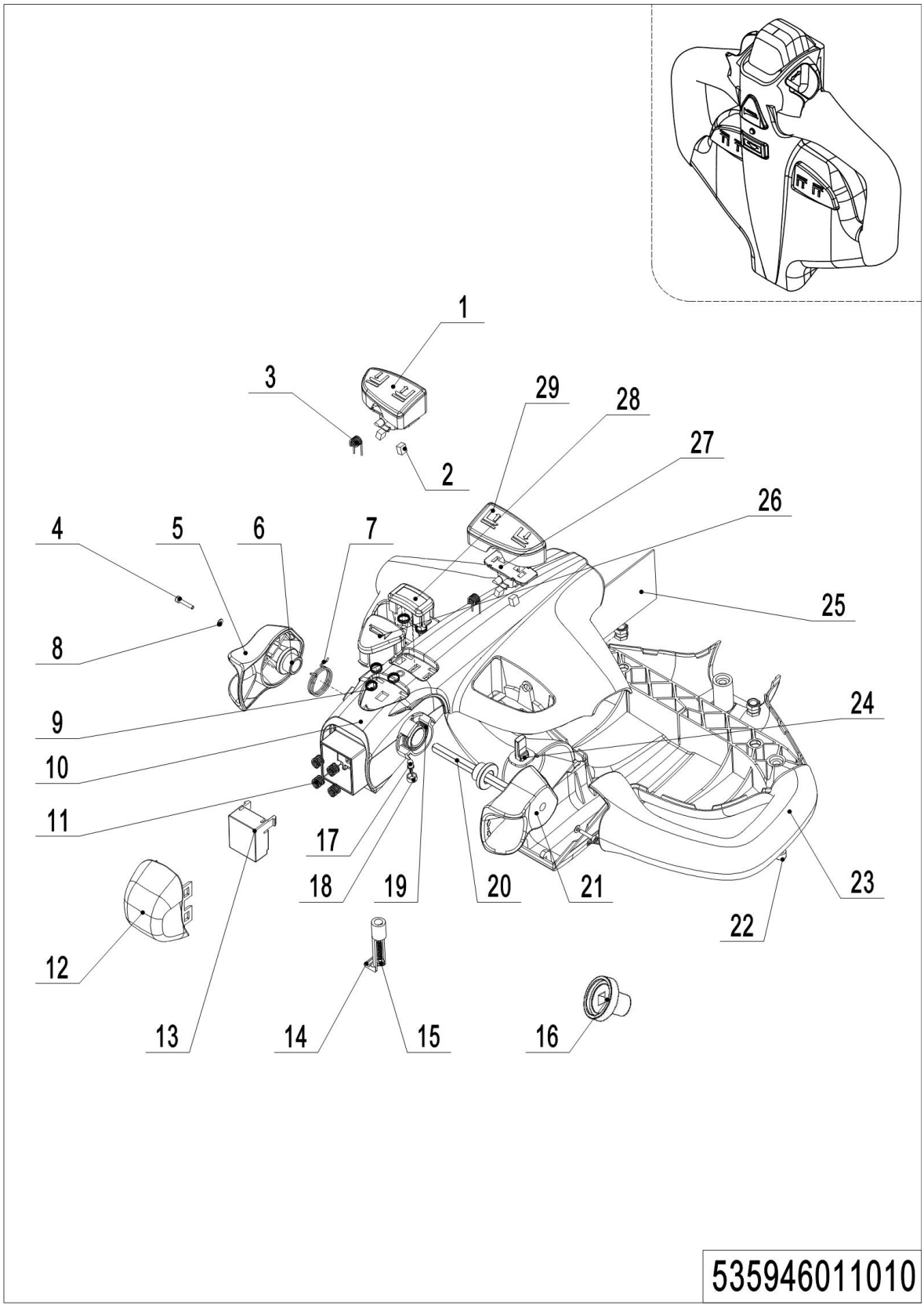

## 03 Control Handle(EN1175-2020) (535946011010)

| No. | Item Code | Mark | Item Description | Qty. | Substitute | Note |
|---|---|---|---|---|---|---|
| -- | 922100100099 | | Control Handle(EN1175-2020) | 1 | | |
| 1 | 505698520016 | | Button cap | 1 | | |
| 2 | 505698520005 | | Magnet | 4 | | |
| 3 | 505698520018 | | Torsional Spring | 2 | | |
| 4 | 505698520008 | | Screw | 2 | | |
| 5 | 505698520001 | | Traction lever | 1 | | |
| 6 | 505698520004 | | Sleeve | 2 | | |
| 7 | 505698520027 | | Torsional Spring | 1 | | |
| 8 | 505698520009 | | Washer | 2 | | |
| 9 | 505698520003 | | Spring | 5 | | |
| 10 | 505698520099 | | Handle Cap | 1 | | |
| 11 | 505698520006 | | Spring | 4 | | |
| 12 | 505698520020 | | Button Cap | 1 | | |
| 13 | 505698520100 | | Pedestal | 1 | | |
| 14 | 505698520012 | | Clamp | 1 | | |
| 15 | 505698520023 | | Screw | 1 | | |
| 16 | 505698520102 | | Holder | 2 | | |
| 17 | 505698520024 | | Light | 1 | | |
| 18 | 505698520025 | | Light Holder | 1 | | |
| 19 | 505698520026 | | Torsional Spring | 1 | | |
| 20 | 505698520011 | | Axle-Traction lever | 1 | | |
| 21 | 505698520010 | | Traction lever | 1 | | |
| 22 | 505698520007 | | Screw | 3 | | |
| 23 | 505698520015 | | Handle Cap | 1 | | |
| 24 | 505698520013 | | Sensor | 2 | | |
| 25 | 505698520101 | | Circuit Board | 1 | | |
| 26 | 505698520002 | | Horn Button | 1 | | |
| 27 | 505698520017 | | Fixing Base | 2 | | |
| 28 | 505698520021 | | Button Cap | 1 | | |
| 29 | 505698520022 | | Button Cap | 1 | | |

## 04 Load Wheel (532946017001)

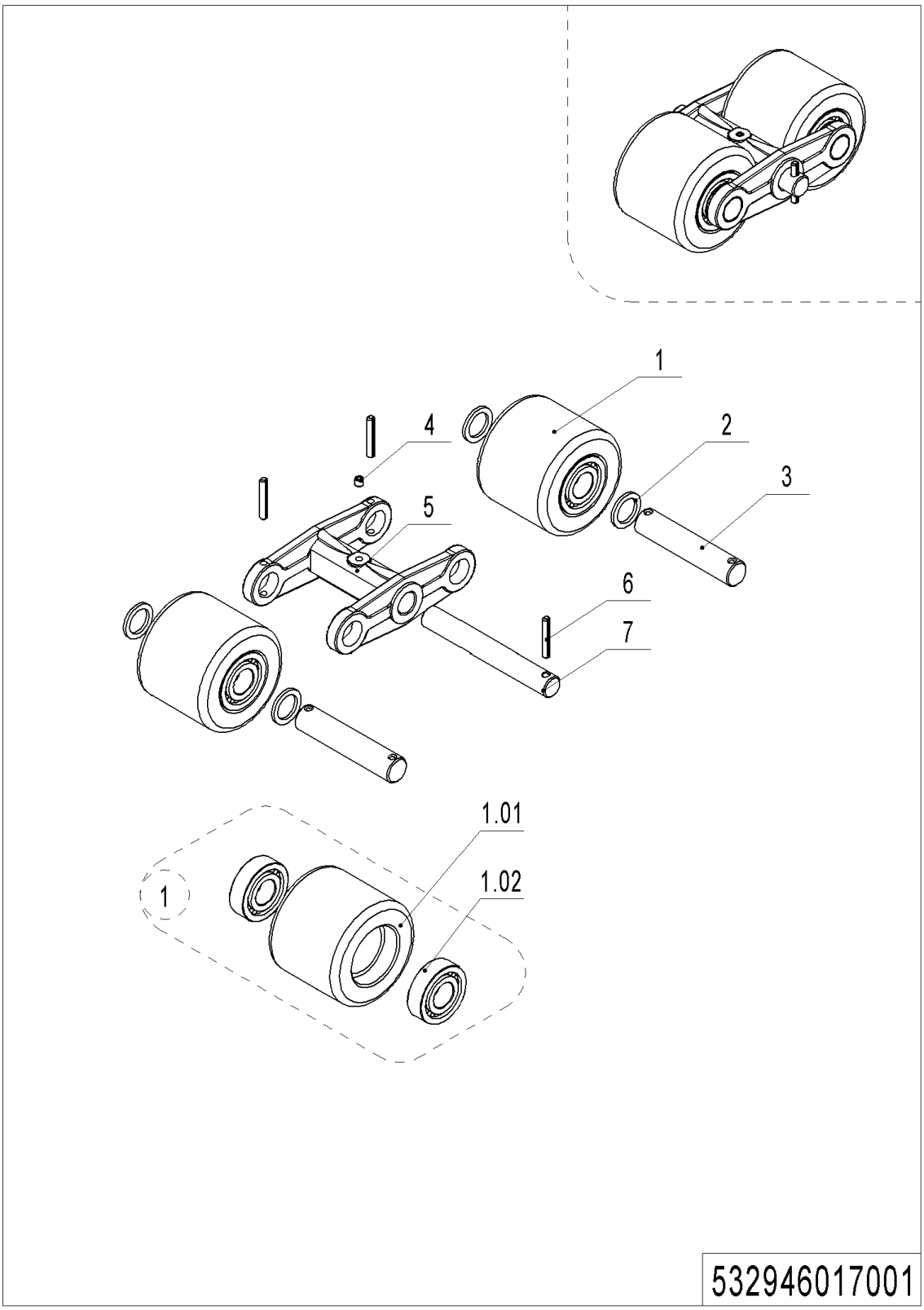

## 04 Load Wheel (532946017001)

| No. | Item Code | Mark | Item Description | Qty. | Substitute | Note |
|---|---|---|---|---|---|---|
| -- | 532998510000 | | Wheel | 2 | | |
| 1 | 532998510001 | | Wheel | 4 | | |
| 1.01 | 940300300009 | | WheelΦ84x70 | 4 | | |
| 1.02 | 910700200019 | | Bearing | 8 | | |
| 2 | 940600500004 | | Washer | 8 | | |
| 3 | 504117020005 | | Axle | 4 | | |
| 4 | 911200100001 | | Oil Cup | 2 | | |
| 5 | 504117020004 | | Wheel Carrier | 2 | | |
| 6 | 910600400027 | 1 | Spring Pin | 6 | | |
| 7 | 504117020003 | | Axle | 2 | | |

## 05 Caster (534746016501)

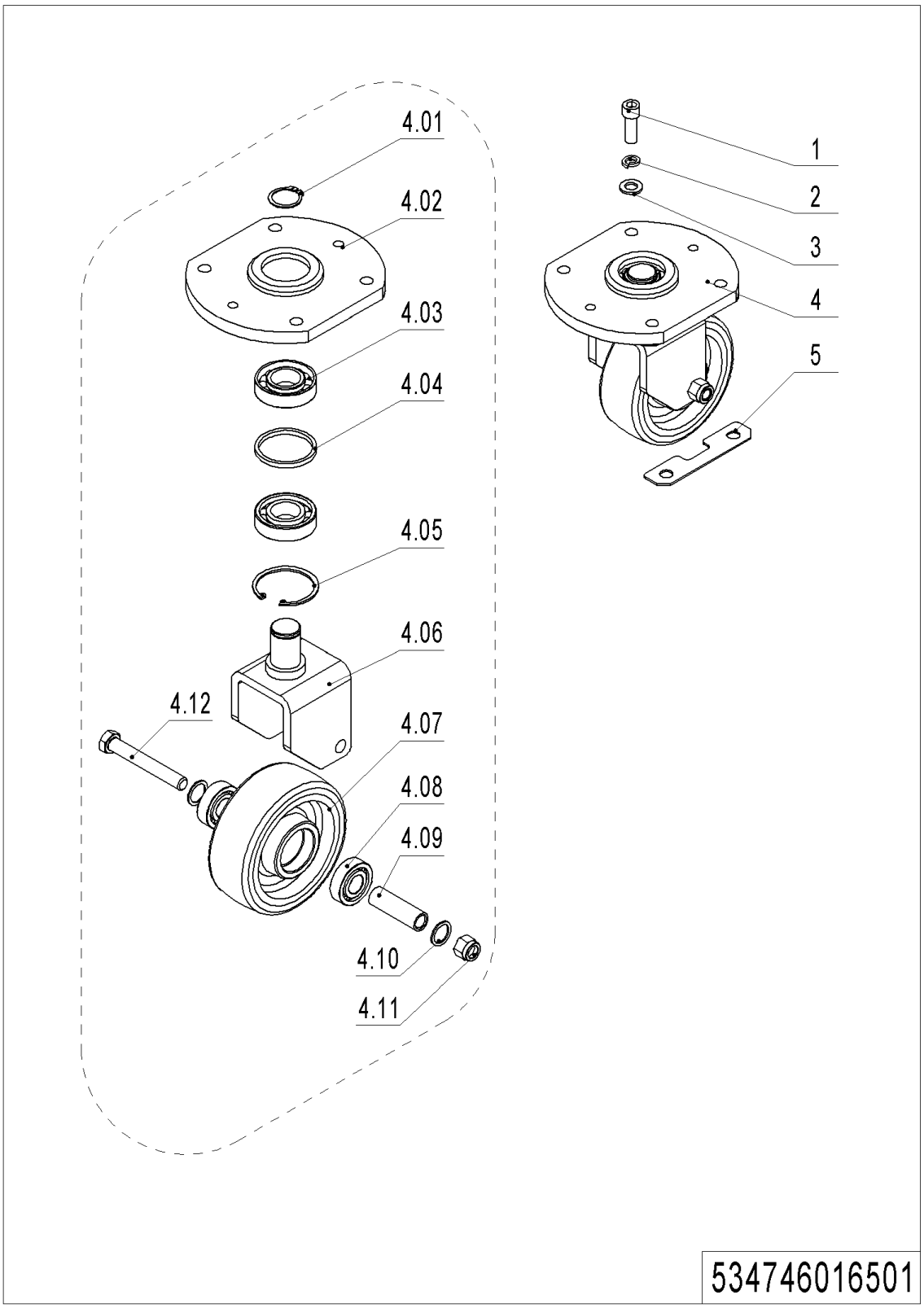


---

**1= Supply as package. 2= Supply with constraints. 3= Phasing-out supply. 4= Supply as assembly. 5= Check other tables.**

## 05 Caster (534746016501)

| No. | Item Code | Mark | Item Description | Qty. | Substitute | Note |
|---|---|---|---|---|---|---|
| 1 | 910200200099 | | Screw | 4 | | |
| 2 | 910400500008 | | Spring Washer | 4 | | |
| 3 | 910400100008 | | Flat Washer | 4 | | |
| 4 | 534716510002 | | Caster Assembly | 1 | | |
| 4.01 | 910401300016 | | Circlip | 1 | | |
| 4.02 | 534716510000 | | Bracket | 1 | | |
| 4.03 | 910700400004 | | Bearing | 2 | | |
| 4.04 | 532616520001 | | Check Ring | 1 | | |
| 4.05 | 910401400018 | 1 | Circlip | 1 | | |
| 4.06 | 534716510001 | 2 | Wheel Carrier | 1 | | |
| 4.07 | 940300300020 | | WheelΦ150x54 | 1 | | |
| 4.08 | 910700200019 | | Bearing | 2 | | |
| 4.09 | 532616520003 | | Bushing | 1 | | |
| 4.10 | 940600500014 | | Washer | 2 | | |
| 4.11 | 910300500007 | 1 | Nut | 1 | | |
| 4.12 | 910100100069 | 1 | Bolt | 1 | | |
| 5 | 534721520026 | | Subplate | 6 | | |

# Chapter 6: Electrical Parts

## 01 Display Assembly (535946010001)

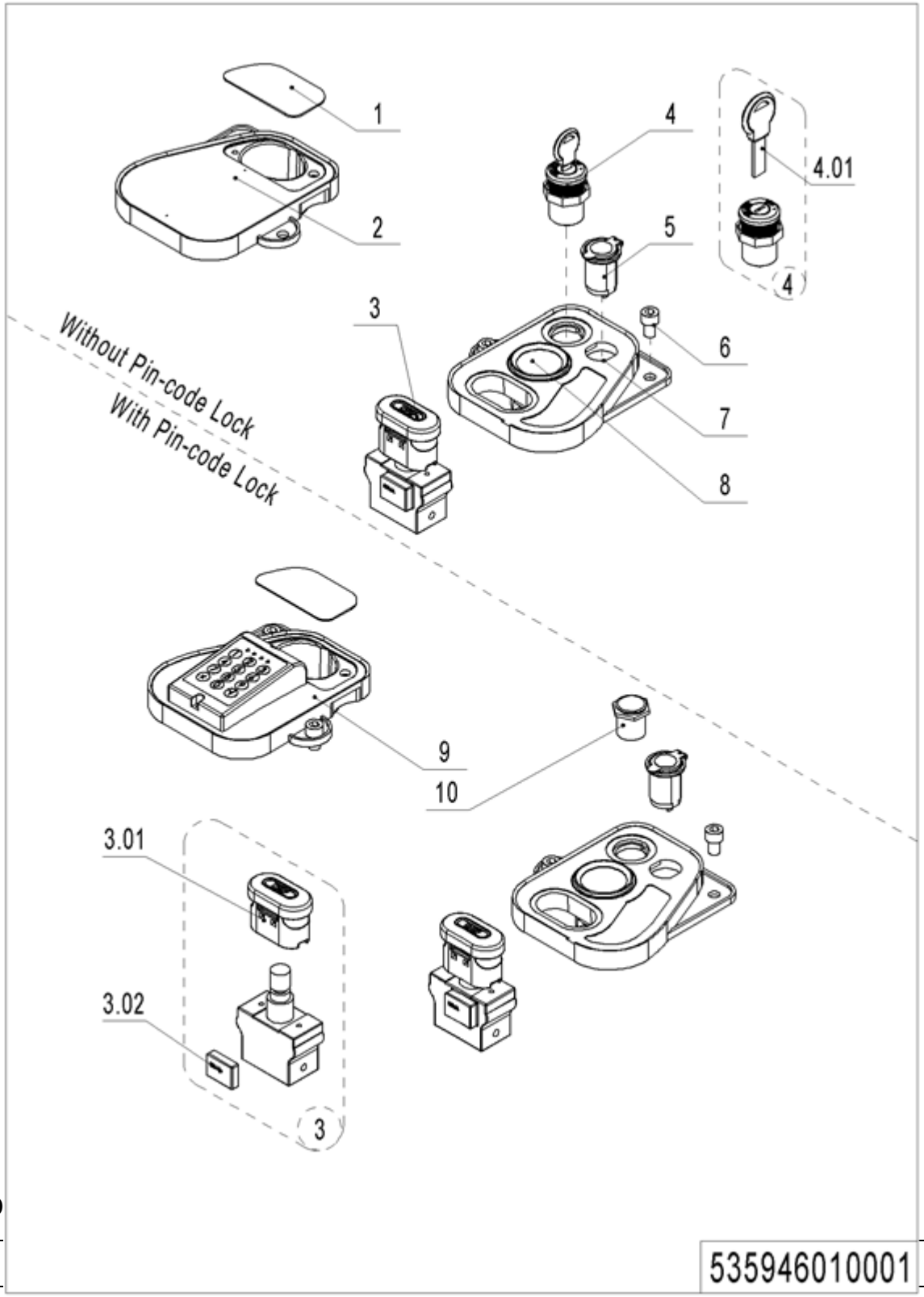


01 D

| No. | |
|---|---|

---

**1= Supply as package. 2= Supply with constraints. 3= Phasing-out supply. 4= Supply as assembly. 5= Check other tables.**

| | | | | | | |
|---|---|---|---|---|---|---|
| 1 | 535910020003 | | Close Plate | 1 | | External charger |
| 2 | 535910020002 | | Bezel | 1 | | |
| 3 | 920200100009 | | Emergency Button | 1 | | |
| 3.01 | 920200100010 | | Emergency Button | 1 | | |
| 3.02 | 920200100012 | | Emergency Button | 1 | | |
| 4 | 505634010000 | | Key Switch | 1 | | |
| 4 | 505634010001 | | Key Switch | 1 | | Li battery |
| 4.01 | 920200200012 | | Key | 1 | | |
| 4.01 | 403898520003 | | Key | 1 | | Li battery |
| 5 | 206033010036 | | USB interface | 1 | | |
| 6 | 910200200074 | 1 | Screw | 4 | | |
| 7 | 535910020001 | | Bezel | 1 | | |
| 8 | 921100100012 | | Display | 1 | | MDI |
| 8 | 921100100049 | | Display | 1 | | D13L |
| 9 | 920200200014 | | Pin-code Lock | 1 | | |
| 10 | 506734010000 | | Button | 1 | | |

## 02 Display Assembly(EN1175-2020) (535946010003)

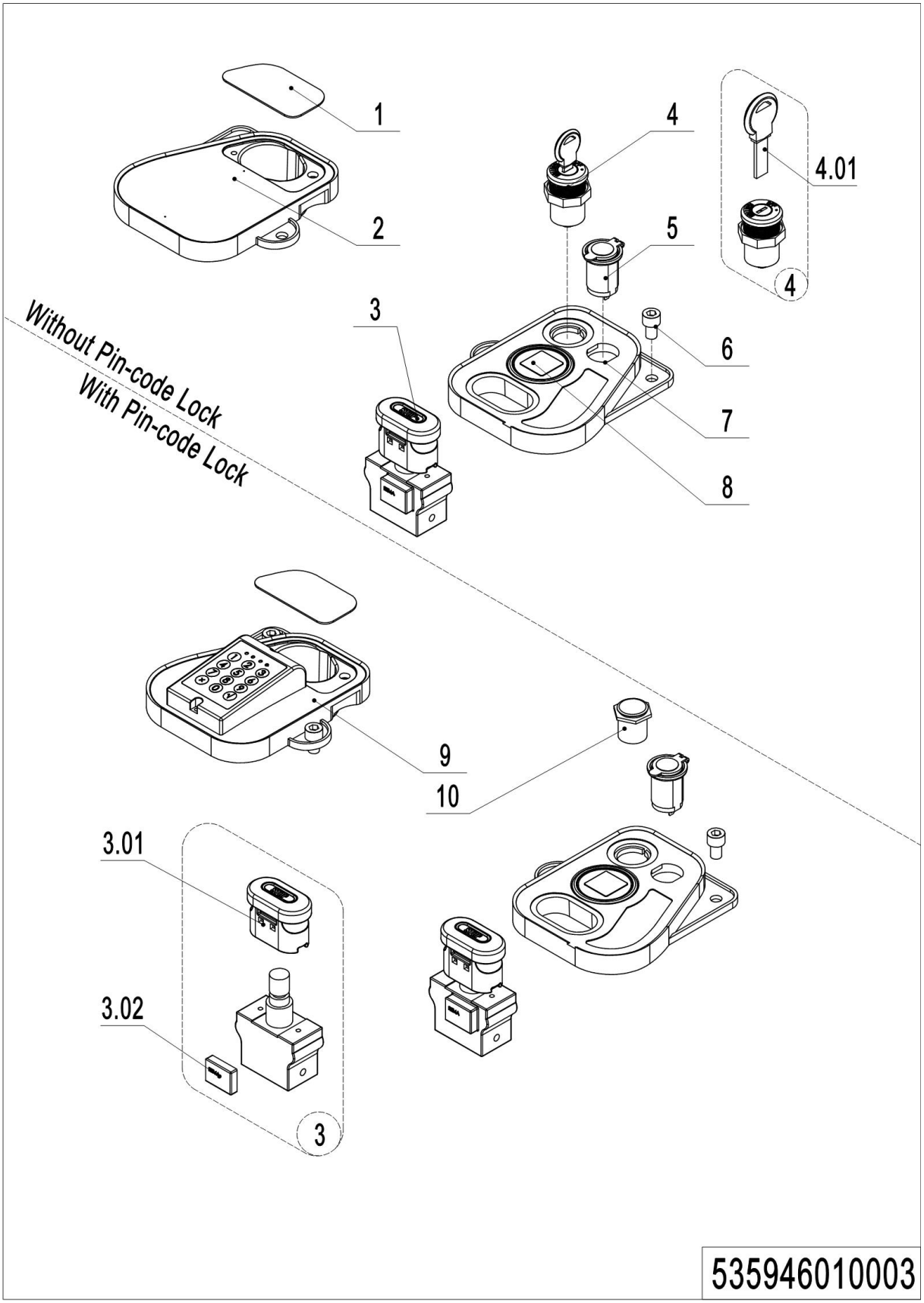


---

**1= Supply as package. 2= Supply with constraints. 3= Phasing-out supply. 4= Supply as assembly. 5= Check other tables.**

## 02 Display Assembly(EN1175-2020) (535946010003)

| No. | Item Code | Mark | Item Description | Qty. | Substitute | Note |
|---|---|---|---|---|---|---|
| 1 | 535910020003 | | Close Plate | 1 | | **External charger** |
| 2 | 535910020002 | | Bezel | 1 | | |
| 3 | 920200100009 | | Emergency Button | 1 | | |
| 3.01 | 920200100010 | | Emergency Button | 1 | | |
| 3.02 | 920200100012 | | Emergency Button | 1 | | |
| 4 | 505634010000 | | Key Switch | 1 | | |
| 4.01 | 920200200012 | | Key | 1 | | |
| 5 | 206033010036 | | USB interface | 1 | | |
| 6 | 910200200074 | 1 | Screw | 4 | | |
| 7 | 535910020001 | | Bezel | 1 | | |
| 8 | 921100100116 | | Display | 1 | | **EN1175-2020** |
| 9 | 920200200014 | | Pin-code Lock | 1 | | |
| 10 | 506734010000 | | Button | 1 | | |

## 03 Wire Harness (535946033001)

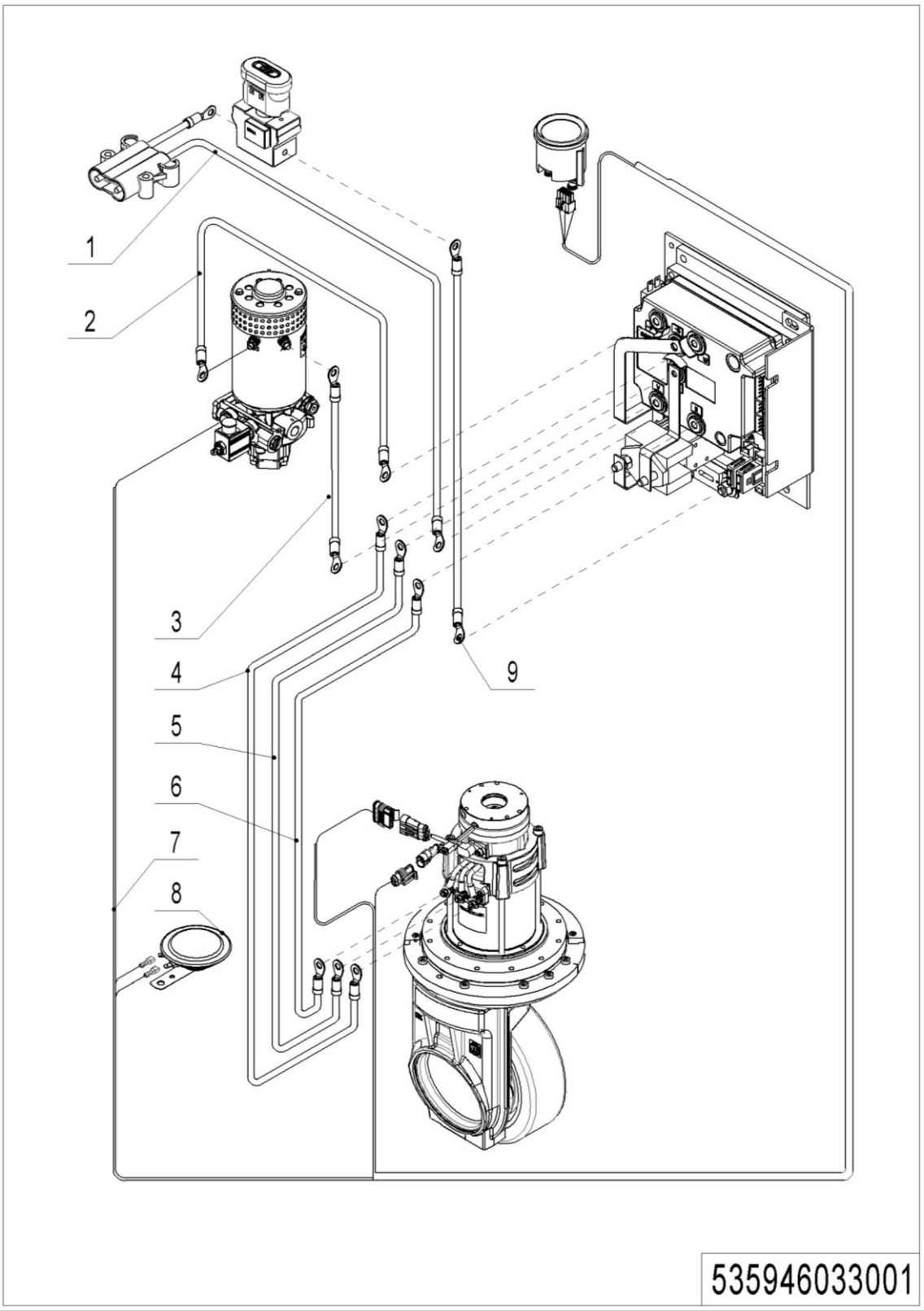


---

**1= Supply as package. 2= Supply with constraints. 3= Phasing-out supply. 4= Supply as assembly. 5= Check other tables.**

## 03 Wire Harness (535946033001)

| No. | Item Code | Mark | Item Description | Qty. | Substitute | Note |
|---|---|---|---|---|---|---|
| 1 | 535933010008 | | Wire Harness | 1 | | |
| 2 | 535933010007 | | Cable | 1 | | |
| 3 | 535933010006 | | Cable | 1 | | |
| 4 | 535933010005 | | Cable | 1 | | |
| 5 | 535933010004 | | Cable | 1 | | |
| 6 | 535933010003 | | Cable | 1 | | |
| 7 | 535933010000 | | Wire Harness | 1 | | |
| 8 | 920500100001 | | Horn | 1 | | |
| 9 | 535933010009 | | Cable | 1 | | |

## 04 Wire Harness (EN175-2020)(535946033011)

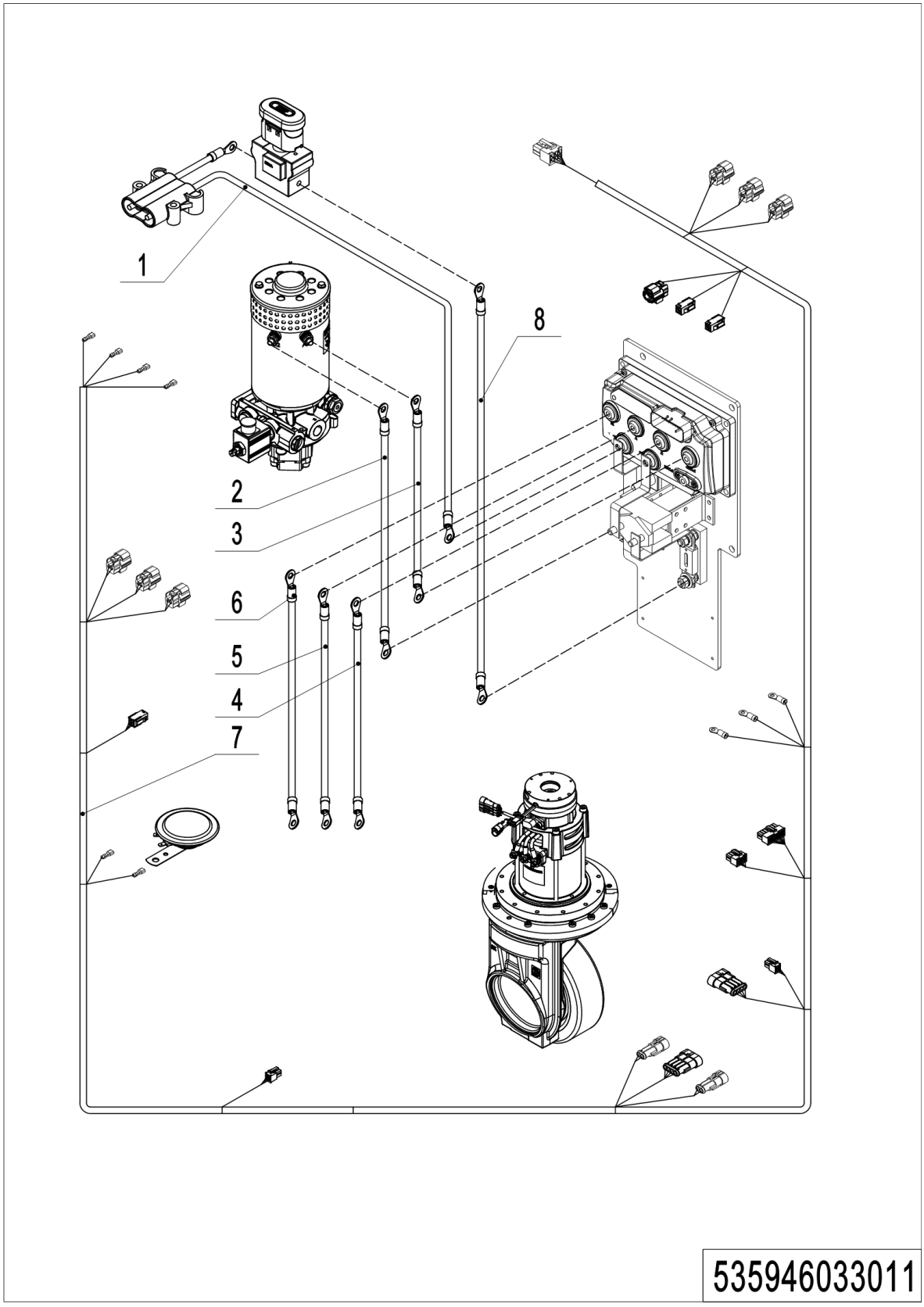


---

**1= Supply as package. 2= Supply with constraints. 3= Phasing-out supply. 4= Supply as assembly. 5= Check other tables.**

## 04 Wire Harness(EN1175-2020)(535946033011)

| No. | Item Code | Mark | Item Description | Qty. | Substitute | Note |
|---|---|---|---|---|---|---|
| 1 | 535933010008 | | Wire Harness | 1 | | 铅酸 |
| 2 | 562633010008 | | Cable | 1 | | |
| 3 | 562633010009 | | Cable | 1 | | |
| 4 | 562633010004 | | Cable | 1 | | |
| 5 | 562633010005 | | Cable | 1 | | |
| 6 | 562633010006 | | Cable | 1 | | |
| 7 | 535933010037 | | Wire Harness | 1 | | |
| 8 | 562633010007 | | Cable | 1 | | |

## 05 Wire Harness (Power Steering) (535946033002)

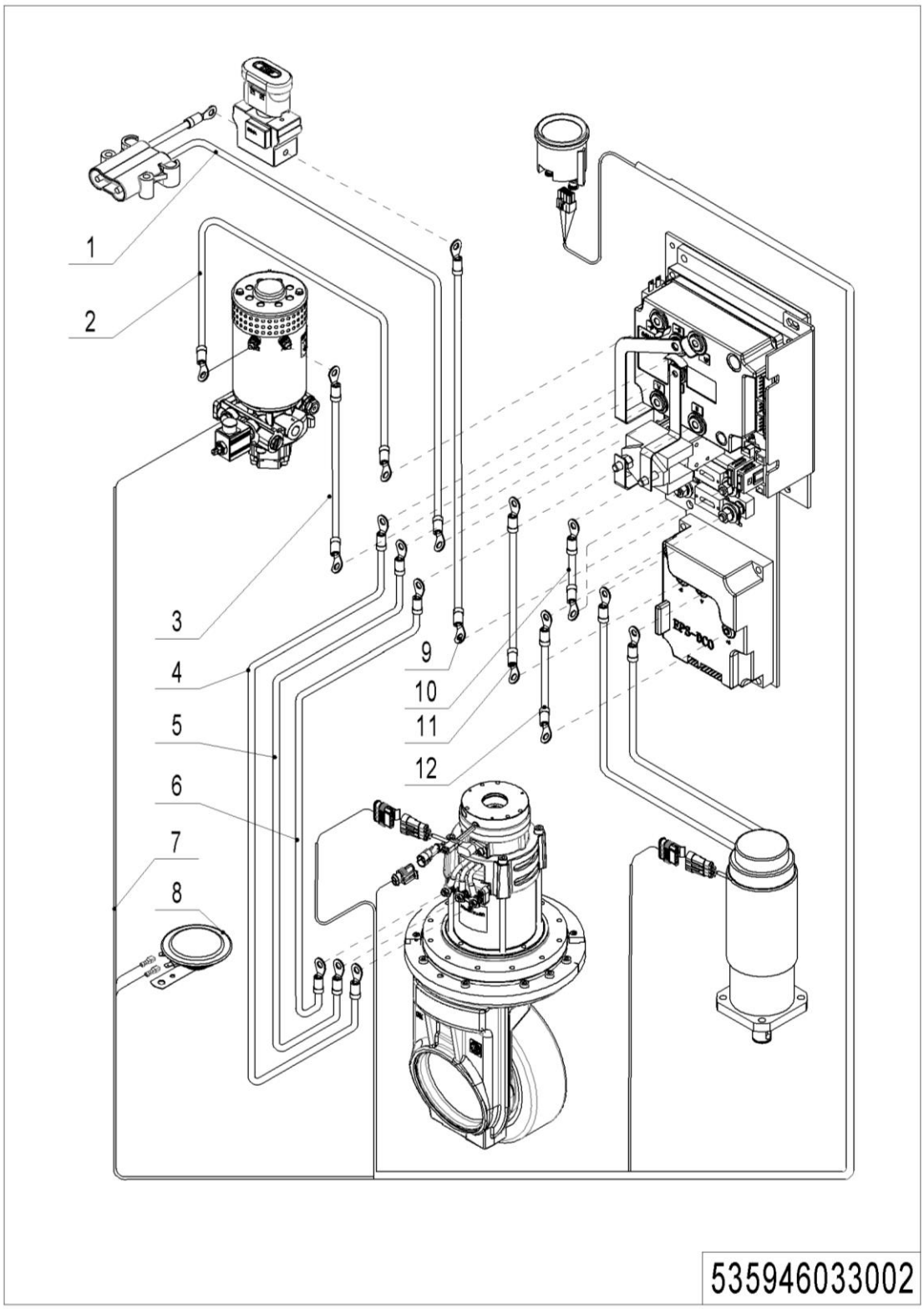


---

**1= Supply as package. 2= Supply with constraints. 3= Phasing-out supply. 4= Supply as assembly. 5= Check other tables.**

## 05 Wire Harness (Power Steering) (535946033002)

| No. | Item Code | Mark | Item Description | Qty. | Substitute | Note |
|---|---|---|---|---|---|---|
| 1 | 535933010008 | | Wire Harness | 1 | | |
| 1 | 535933010021 | | Wire Harness | 1 | | **Li battery** |
| 2 | 535933010007 | | Cable | 1 | | |
| 3 | 535933010006 | | Cable | 1 | | |
| 4 | 535933010005 | | Cable | 1 | | |
| 5 | 535933010004 | | Cable | 1 | | |
| 6 | 535933010003 | | Cable | 1 | | |
| 7 | 535933010001 | | Wire Harness | 1 | | |
| 7 | 535933010020 | | Wire Harness | 1 | | **Li battery** |
| 8 | 920500100001 | | Horn | 1 | | |
| 9 | 535933010009 | | Cable | 1 | | |
| 10 | 535933010014 | | Cables | 1 | | |
| 11 | 535933010016 | | Cables | 1 | | |
| 12 | 535933010015 | | Cables | 1 | | |

## 06 Wire Harness (Power Steering,EN1175-2020) (535946033012)

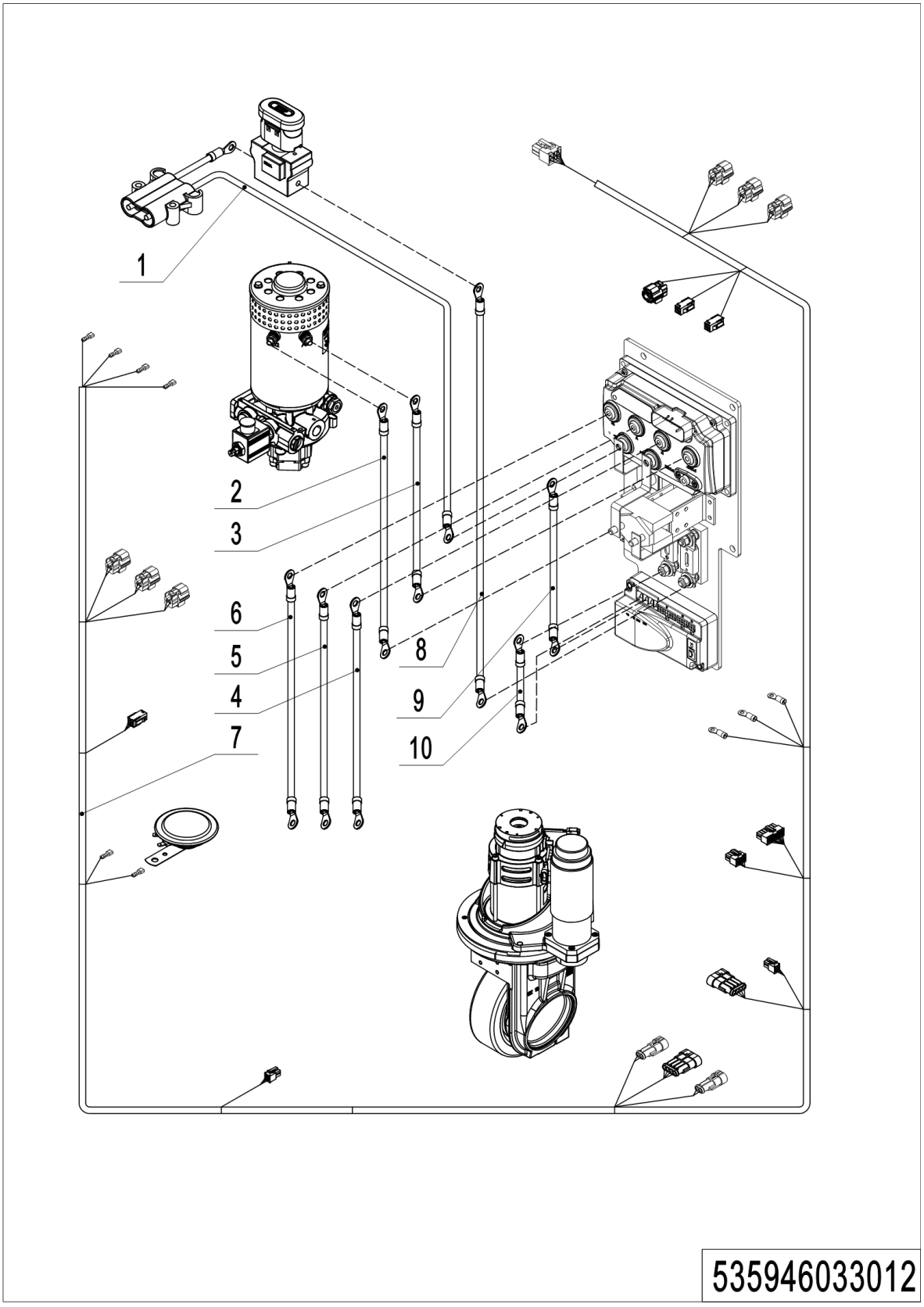


---

**1= Supply as package. 2= Supply with constraints. 3= Phasing-out supply. 4= Supply as assembly. 5= Check other tables.**

## 06 Wire Harness (Power Steering,EN1175-2020) (535946033012)

| No. | Item Code | Mark | Item Description | Qty. | Substitute | Note |
|---|---|---|---|---|---|---|
| 1 | 535933010008 | | Wire Harness | 1 | | |
| 1 | 535933010021 | | Wire Harness | 1 | | **Li battery** |
| 2 | 562633010008 | | Cable | 1 | | |
| 3 | 562633010009 | | Cable | 1 | | |
| 4 | 562633010004 | | Cable | 1 | | |
| 5 | 562633010005 | | Cable | 1 | | |
| 6 | 562633010006 | | Cable | 1 | | |
| 7 | 535933010038 | | Wire Harness | 1 | | |
| 8 | 562633010007 | | Cable | 1 | | |
| 9 | 562633010017 | | Cables | 1 | | |
| 10 | 562633010014 | | Cables | 1 | | |

## 07 Electronic Components (535946033003)

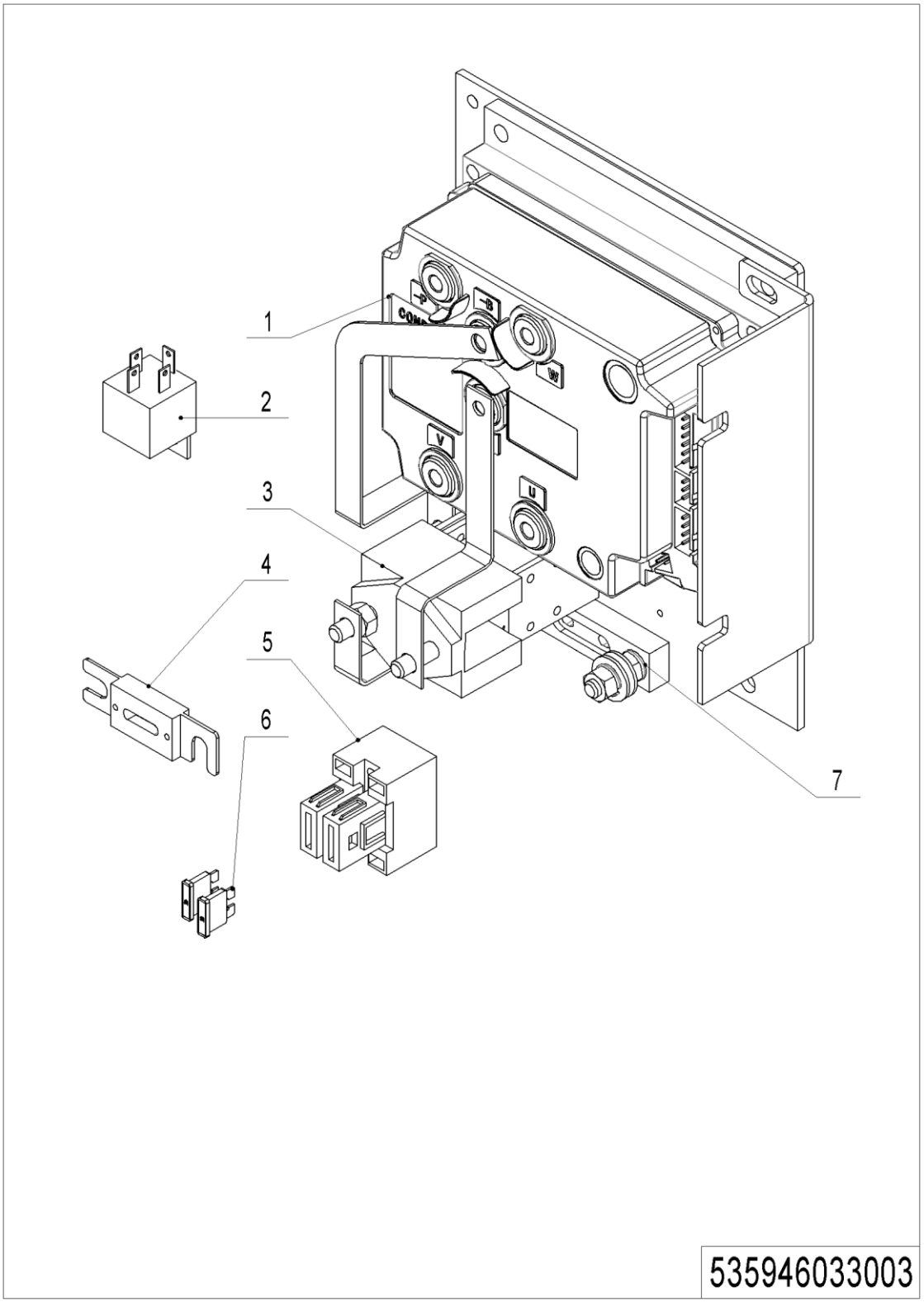


---

**1= Supply as package. 2= Supply with constraints. 3= Phasing-out supply. 4= Supply as assembly. 5= Check other tables.**

## 07 Electronic Components (535946033003)

| No. | Item Code | Mark | Item Description | Qty. | Substitute | Note |
|---|---|---|---|---|---|---|
| 1 | 921400100048 | | Controller | 1 | | |
| 2 | 920800100001 | | Relay | 1 | | |
| 3 | 920700100002 | | Contactor | 1 | | |
| 4 | 920100100013 | | Fuse | 1 | | |
| 5 | 920100400005 | | Fuse Holder | 1 | | |
| 6 | 920100200002 | | Fuse | 2 | | |
| 7 | 920100400002 | | Fuse Holder | 1 | | |

## 08 Electronic Components (EN1175-2020)(535946033013)

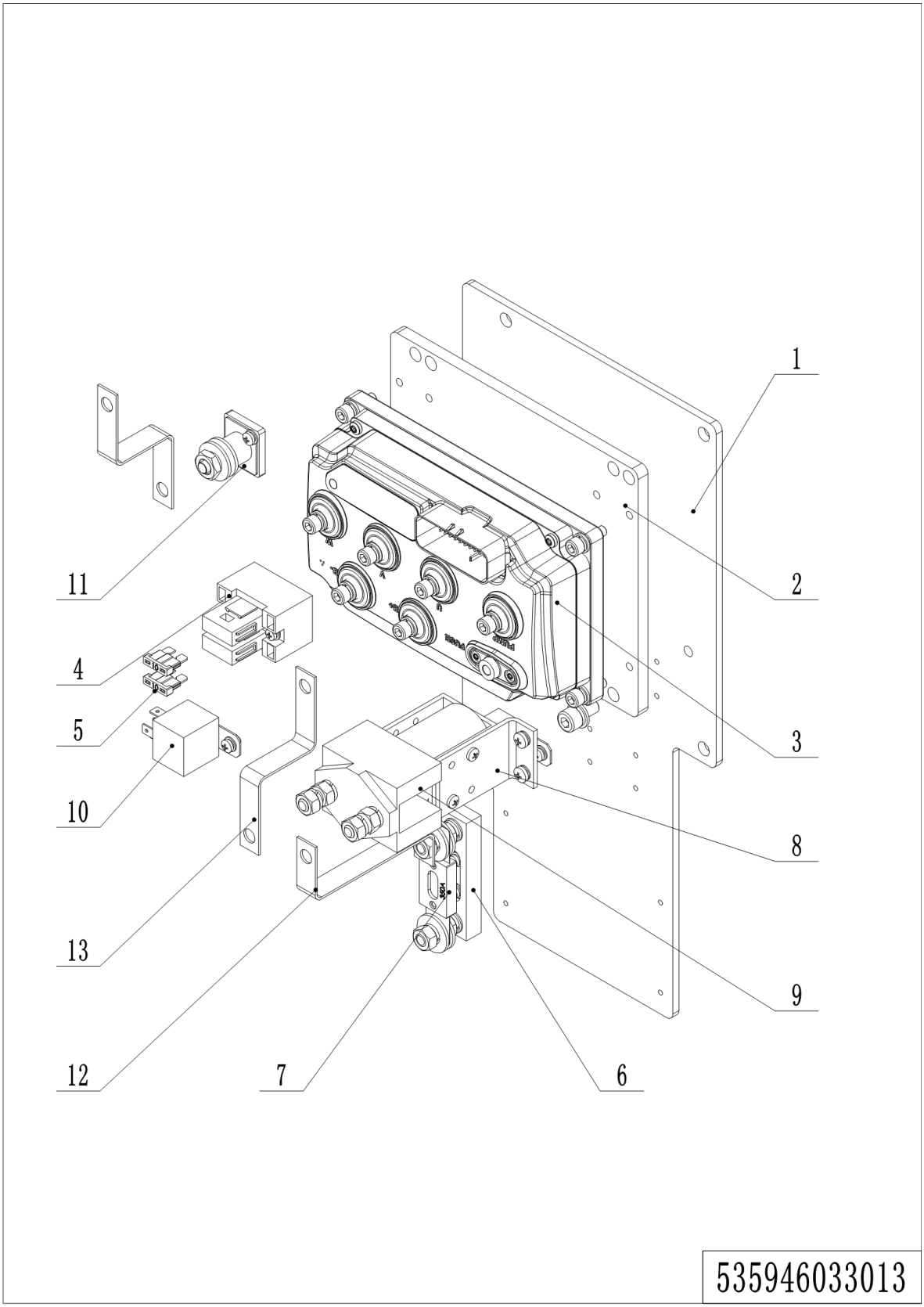


---

**1= Supply as package. 2= Supply with constraints. 3= Phasing-out supply. 4= Supply as assembly. 5= Check other tables.**

## 08 Electronic Components (EN1175-2020)(535946033013)

| No. | Item Code | Mark | Item Description | Qty. | Substitute | Note |
|---|---|---|---|---|---|---|
| 1 | 562633020002 | | Mounting Plate | 1 | | |
| 2 | 534733020003 | | Mounting Plate | 1 | | |
| 3 | 921400100124 | | Controller | 1 | | |
| 4 | 920100400005 | | Fuse Holder | 1 | | |
| 5 | 920100100001 | | Fuse | 2 | | |
| 6 | 920100400002 | | Fuse Holder | 1 | | |
| 7 | 920100100013 | | Fuse | 1 | | |
| 8 | 921300400004 | | Fixing Mount | 1 | | |
| 9 | 920700100002 | | Contactor | 1 | | |
| 10 | 920800100001 | | Relay | 1 | | |
| 11 | 920100400001 | | Fuse Holder | 1 | | |
| 12 | 535933020004 | | Copper Busbar | 1 | | |
| 13 | 535933020006 | | Copper Busbar | 2 | | |

## 09 Electronic Components (EPS) (535946033004)

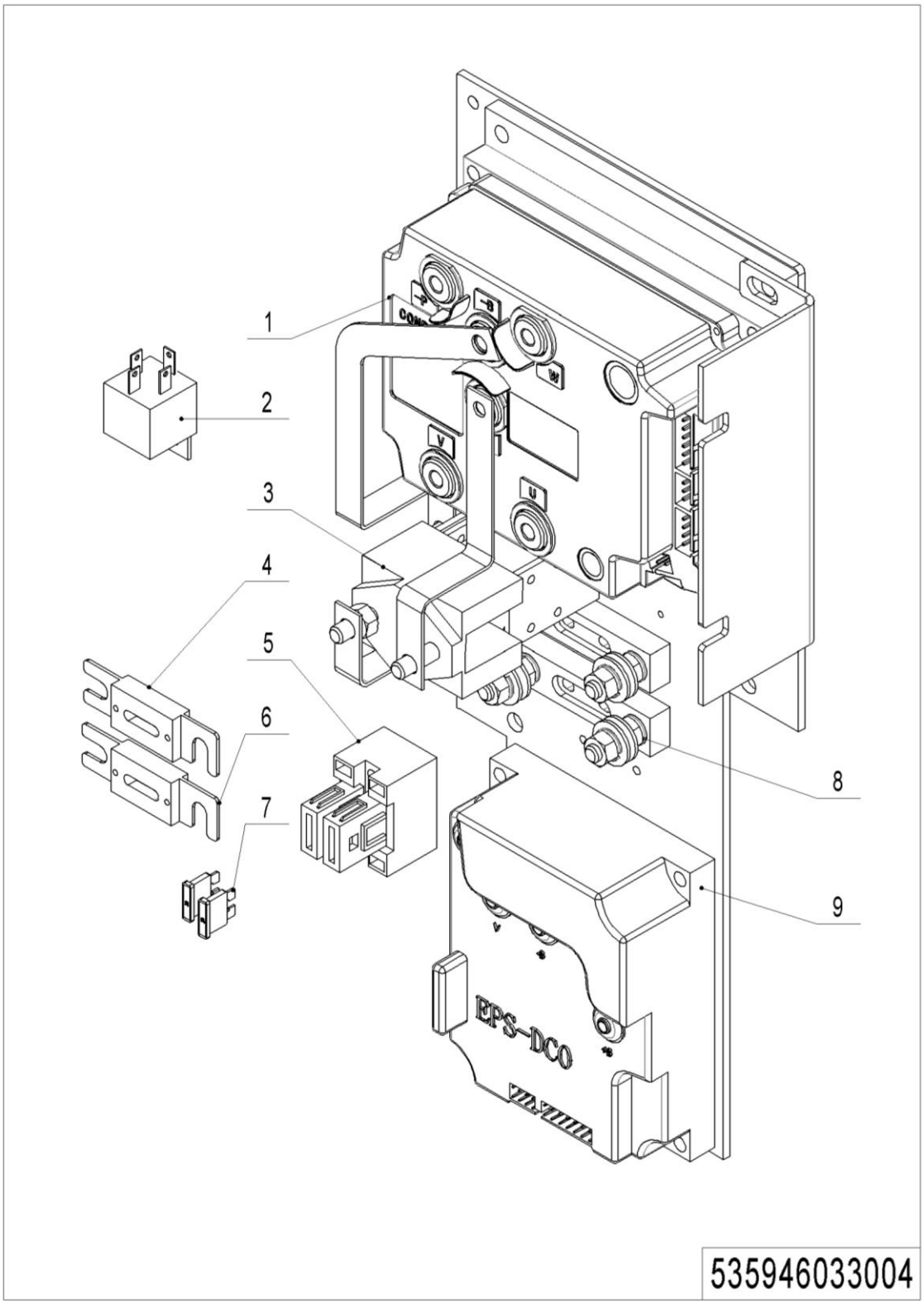

## 09 Electronic Components (EPS) (535946033004)

| No. | Item Code | Mark | Item Description | Qty. | Substitute | Note |
|---|---|---|---|---|---|---|
| 1 | 921400100048 | | Controller | 1 | | |
| 2 | 920800100001 | | Relay | 1 | | |
| 3 | 920700100002 | | Contactor | 1 | | |
| 4 | 920100100013 | | Fuse | 1 | | |
| 5 | 920100400005 | | Fuse Holder | 1 | | |
| 6 | 920100100001 | | Fuse | 1 | | |
| 7 | 920100200002 | | Fuse | 2 | | |
| 8 | 920100400002 | | Fuse Holder | 2 | | |
| 9 | 921400100030 | | Controller | 1 | | |

## 10 Electronic Components (EPS,EN1175-2020)(535946033014)

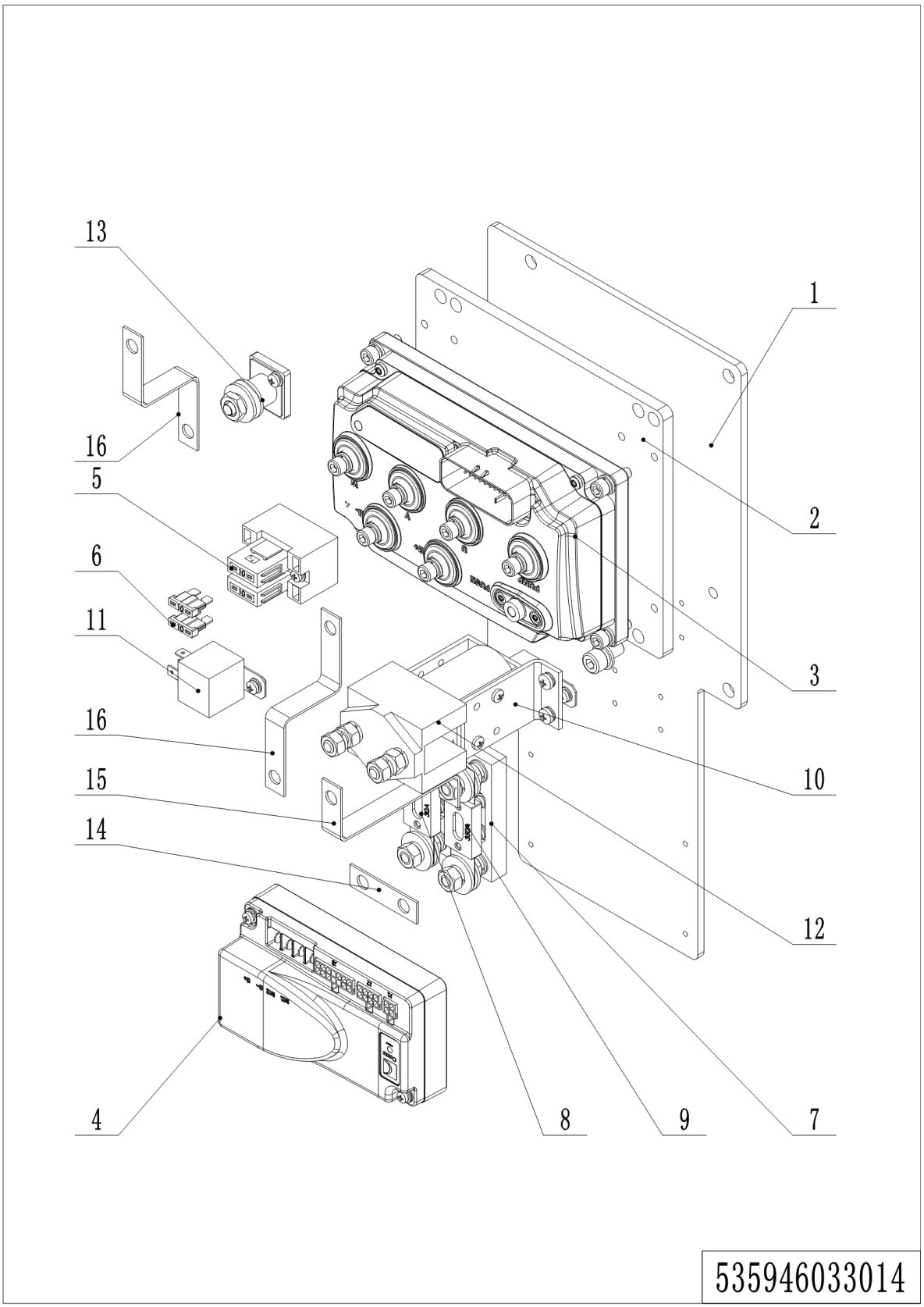

## 10 Electronic Components(EPS,EN1175-2020)(535946033014)

| No. | Item Code | Mark | Item Description | Qty. | Substitute | Note |
|---|---|---|---|---|---|---|
| 1 | 562633020001 | | Mounting Plate | 1 | | |
| 2 | 534733020003 | | Mounting Plate | 1 | | |
| 3 | 921400100124 | | Controller | 1 | | |
| 4 | 921400100077 | | Controller | 1 | | |
| 5 | 920100400005 | | Fuse Holder | 1 | | |
| 6 | 920100200002 | | Fuse | 2 | | |
| 7 | 920100400002 | | Fuse Holder | 2 | | |
| 8 | 920100100001 | | Fuse | 1 | | |
| 9 | 920100100013 | | Fuse | 1 | | |
| 10 | 921300400004 | | Fixing Mount | 1 | | |
| 11 | 920700100002 | | Contactor | 1 | | |
| 12 | 920800100001 | | Relay | 1 | | |
| 13 | 920100400001 | | Fuse Holder | 1 | | |
| 14 | 505633020003 | | Copper Busbar | 1 | | |
| 15 | 535933020004 | | Copper Busbar | 1 | | |
| 16 | 535933020006 | | Copper Busbar | 2 | | |

## 11 Charger (535946036501)

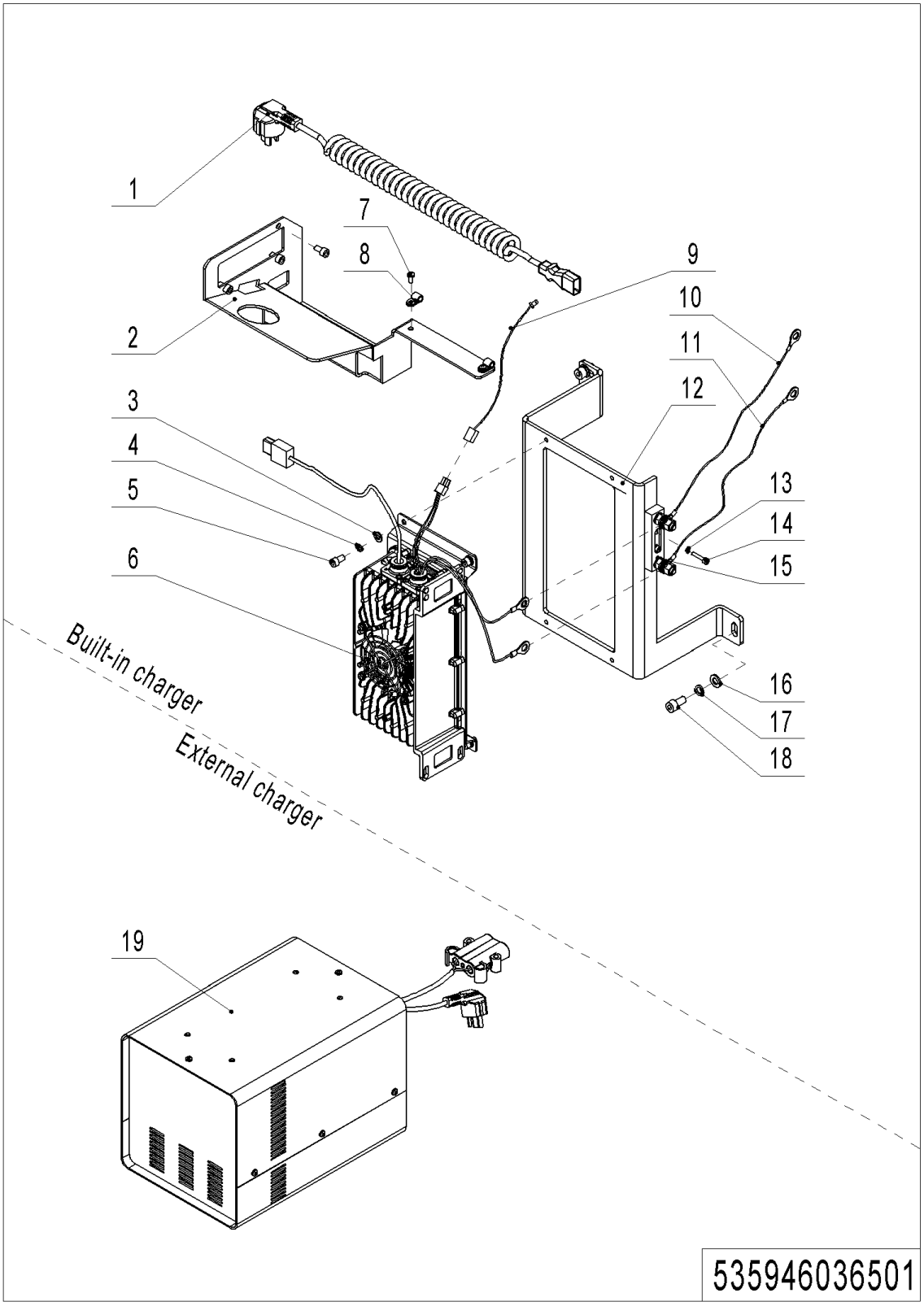

## 11 Charger (535946036501)

| No. | Item Code | Mark | Item Description | Qty. | Substitute | Note |
|---|---|---|---|---|---|---|
| 1 | 921500200008 | | Spring Cable（Asia） | 1 | | |
| 1 | 921500200005 | | Spring Cable(EU) | 1 | | |
| 1 | 921500200003 | | Spring Cable(AUS) | 1 | | |
| 1 | 921500200004 | | Spring Cable(ENG) | 1 | | |
| 1 | 921500200031 | | Spring Cable(USA) | 1 | | |
| 1 | 921500200037 | | Spring Cable(ARG) | 1 | | |
| 1 | 921500200029 | | Spring Cable(ISR) | 1 | | |
| 1 | 921500200061 | | Spring Cable(BRA) | 1 | | |
| 2 | 535936510001 | | Baffle | 1 | | |
| 3 | 910400100005 | | Flat Washer | 4 | | |
| 4 | 910400500005 | | Spring Washer | 4 | | |
| 5 | 910200200033 | | Screw | 7 | | |
| 6 | 921000100036 | | Charger24V35A | 1 | | |
| 7 | 910200500021 | | Screw | 2 | | |
| 8 | 921300200001 | | Cable Clamp | 2 | | |
| 9 | 922000100020 | | Lamp | 1 | | |
| 10 | 535933010012 | | Cables | 1 | | |
| 11 | 535933010013 | | Cables | 1 | | |
| 12 | 535936520001 | | Mounting Plate | 1 | | |
| 13 | 910400500003 | | Spring Washer | 2 | | |
| 14 | 910200200016 | | Screw | 2 | | |
| 15 | 920100400002 | | Fuse Holder | 1 | | |
| 16 | 910400100006 | | Flat Washer | 3 | | |
| 17 | 910400500006 | | Spring Washer | 3 | | |
| 18 | 910200200055 | | Screw | 3 | | |
| 19 | 921000200183 | | Charger24V35A(Aisa-CHN) | 1 | | |
| 19 | 921000200184 | | Charger24V35A(Aisa-ENG) | 1 | | |
| 19 | 921000200185 | | Charger24V35A(EU) | 1 | | |
| 19 | 921000200186 | | Charger24V35A(ENG) | 1 | | |
| 19 | 921000200187 | | Charger24V35A(AUS) | 1 | | |

## 11 Charger (535946036501) Continuation

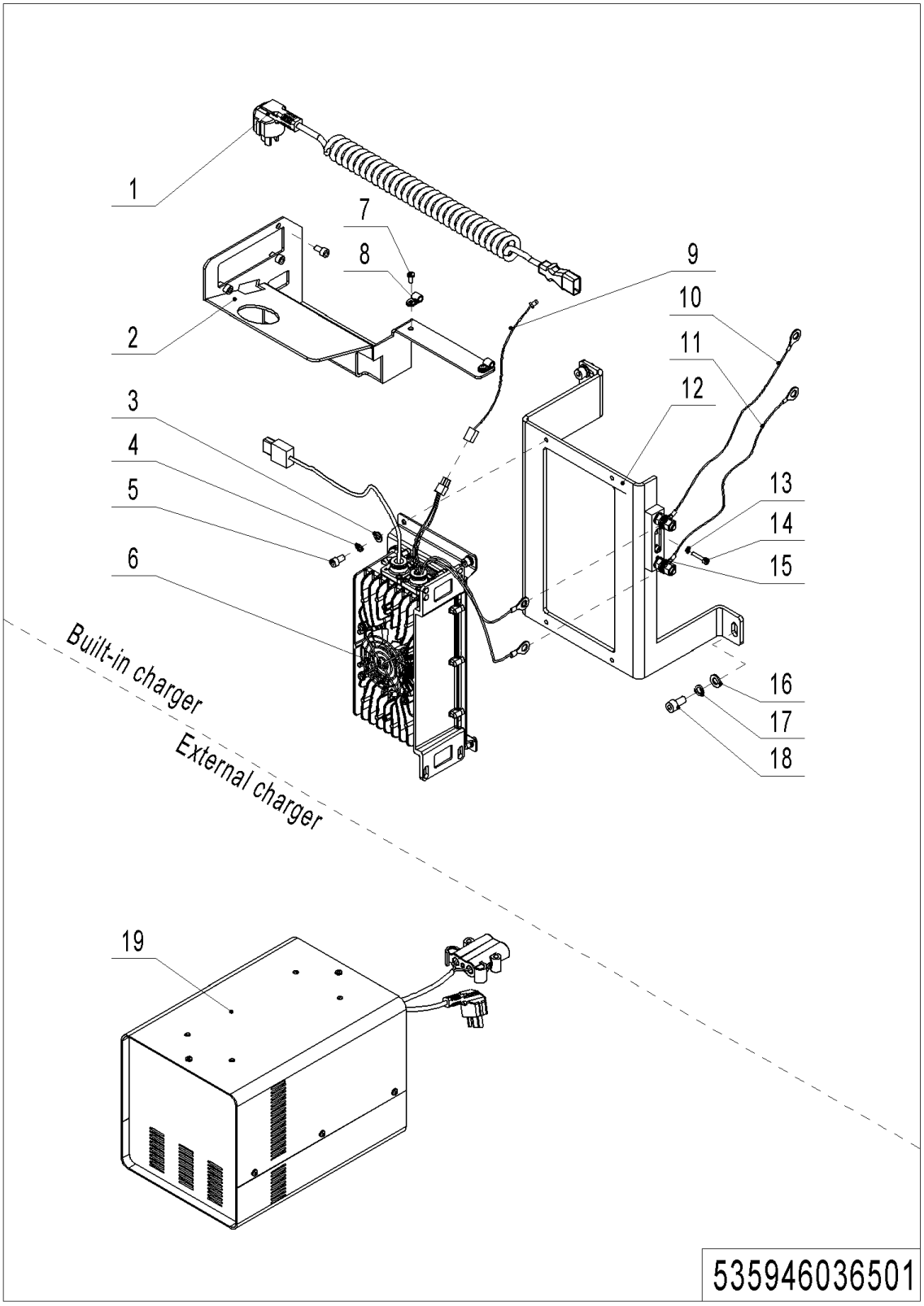

## 11 Charger (535946036501) Continuation

| No. | Item Code | Mark | Item Description | Qty. | Substitute | Note |
|---|---|---|---|---|---|---|
| 19 | 921000200188 | | Charger24V35A(USA) | 1 | | |
| 19 | 921000200365 | | Charger24V35A(ISR) | 1 | | |
| 19 | 921000200489 | | Charger24V35A(BRA) | 1 | | |
| 19 | 921000200284 | | Charger24V35A(Aisa-CHN) | 1 | | |
| 19 | 921000200290 | | Charger24V35A(Aisa-ENG) | 1 | | |
| 19 | 921000200294 | | Charger24V35A(EU) | 1 | | |
| 19 | 921000200302 | | Charger24V35A(AUS) | 1 | | |
| 19 | 921000200298 | | Charger24V35A(ENG) | 1 | | |
| 19 | 921000200306 | | Charger24V35A(USA) | 1 | | |
| 19 | 921000200366 | | Charger24V35A(ISR) | 1 | | |
| 19 | 921000200283 | | Charger24V30A(Aisa-CHN) | 1 | | |
| 19 | 921000200289 | | Charger24V30A(Aisa-ENG) | 1 | | |
| 19 | 921000200293 | | Charger24V30A(EU) | 1 | | |
| 19 | 921000200301 | | Charger24V30A(AUS) | 1 | | |
| 19 | 921000200297 | | Charger24V30A(ENG) | 1 | | |
| 19 | 921000200305 | | Charger24V30A(USA) | 1 | | |
| 19 | 921000200368 | | Charger24V30A(ISR) | 1 | | |
| 19 | 921000200001 | | Charger24V30A(Aisa-CHN) | 1 | | |
| 19 | 921000200002 | | Charger24V30A(Aisa-ENG) | 1 | | |
| 19 | 921000200003 | | Charger24V30A(EU) | 1 | | |
| 19 | 921000200004 | | Charger24V30A(AUS) | 1 | | |
| 19 | 921000200005 | | Charger24V30A(ENG) | 1 | | |
| 19 | 921000200006 | | Charger24V30A(USA) | 1 | | |
| 19 | 921000200490 | | Charger 24V30A(BRA) | 1 | | |
| 19 | 921000200360 | | Charger24V30A(ISR) | 1 | | |

## 12 Charger(Li) (535946036502)

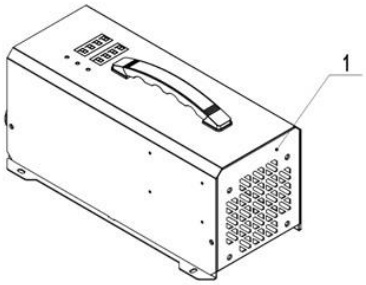


535946036501

---

**1= Supply as package. 2= Supply with constraints. 3= Phasing-out supply. 4= Supply as assembly. 5= Check other tables.**

## 12 Charger(Li) (535946036502)

| No. | Item Code | Mark | Item Description | Qty. | Substitute | Note |
|---|---|---|---|---|---|---|
| 1 | 921000200533 | | Charger24V80A(EU) | 1 | | |
| 1 | 921000200534 | | Charger24V80A(ENG) | 1 | | |
| 1 | 921000200535 | | Charger24V80A(AUS) | 1 | | |
| 1 | 921000200536 | | Charger24V80A(ISR) | 1 | | |
| 1 | 921000200537 | | Charger24V80A(ARG) | 1 | | |
| 1 | 921000200538 | | Charger24V80A(ZA) | 1 | | |
| 1 | 921000200539 | | Charger24V8A(US) | 1 | | |
| 1 | 921000200524 | | Charger24V60A(EU) | 1 | | |
| 1 | 921000200525 | | Charger24V60A(ENG) | 1 | | |
| 1 | 921000200526 | | Charger24V60A(AUS) | 1 | | |
| 1 | 921000200527 | | Charger24V60A((ISR) | 1 | | |
| 1 | 921000200528 | | Charger24V60A(ARG) | 1 | | |
| 1 | 921000200529 | | Charger24V60A(ZA) | 1 | | |
| 1 | 921000200530 | | Charger24V60A(US) | 1 | | |
| 1 | 921000200631 | | Charger24V60A(THA) | 1 | | |
| 1 | 921000200664 | | Charger24V80A(BIGZA) | 1 | | |
| 1 | 921000200663 | | Charger24V60A(BIGZA) | 1 | | |
| 1 | 921000200649 | | Charger24V60A(Asia) | 1 | | |
| 1 | 921000200652 | | Charger24V80A(Asia-CHN) | 1 | | |
| 1 | 921000200532 | | Charger24V80A(Asia-EN) | 1 | | |

## 13 Traction Battery (534746037001)

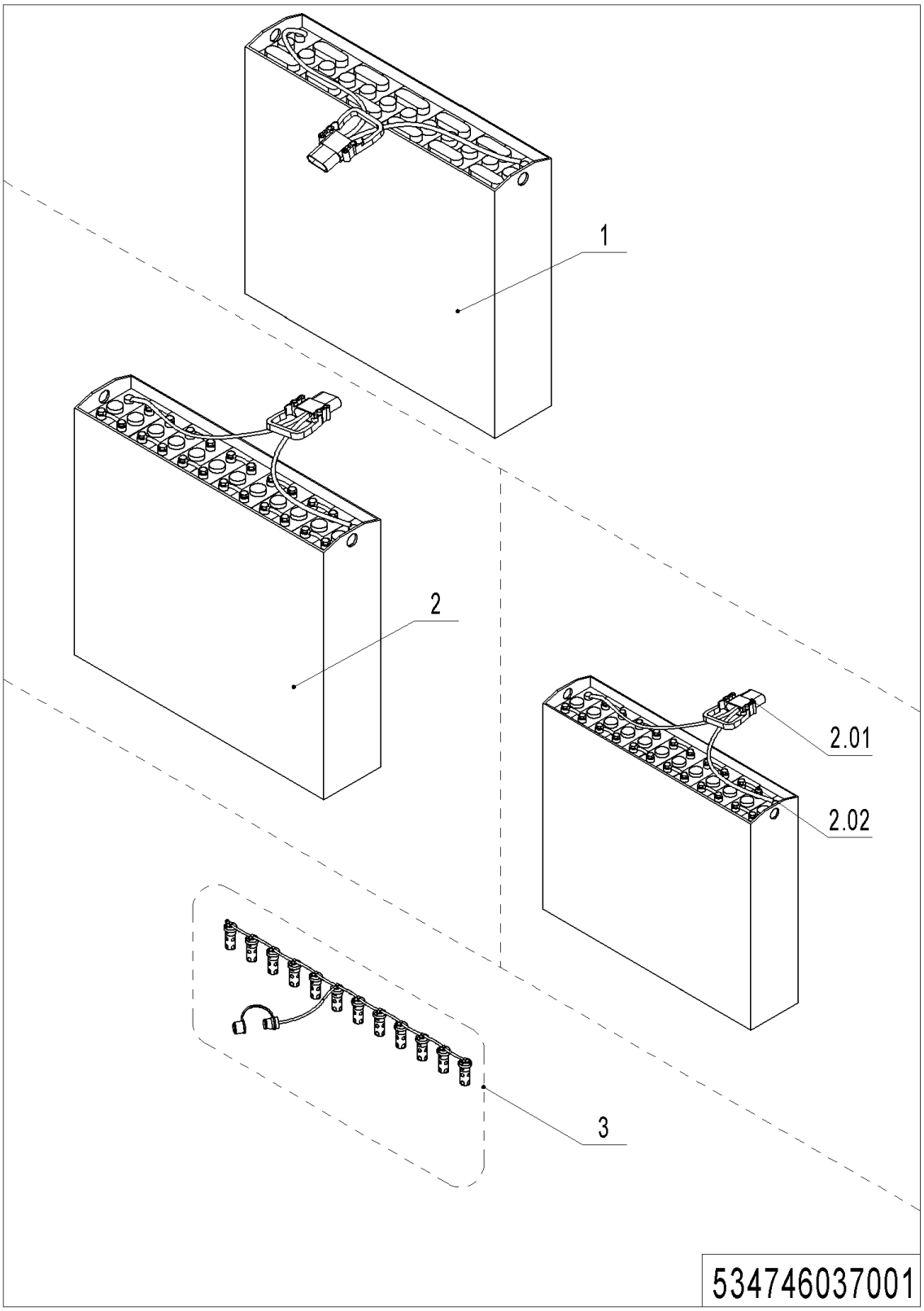

## 13 Traction Battery (534746037001)

| No. | Item Code | Mark | Item Description | Qty. | Substitute | Note |
|---|---|---|---|---|---|---|
| 1 | 535937010002 | | Battery24V210Ah(welded) | 1 | | |
| 1 | 535937010004 | | Battery24V240Ah(welded) | 1 | | |
| 1 | 534737010000 | | Battery24V270Ah(welded) | 1 | | |
| 2 | 535937010001 | | Battery24V210Ah | 1 | | |
| 2 | 535937010003 | | Battery24V240Ah | 1 | | |
| 2 | 534737010001 | | Battery24V270Ah | 1 | | |
| 2.01 | 920400100007 | | Connector | 1 | | **For all battery** |
| 2.02 | 505698520000 | | Bolt | 24 | | **For Bolted battery** |
| 3 | 535937110000 | | Water refilling system | 1 | | **Optional** |

## 14 Li Battery (535946037002)

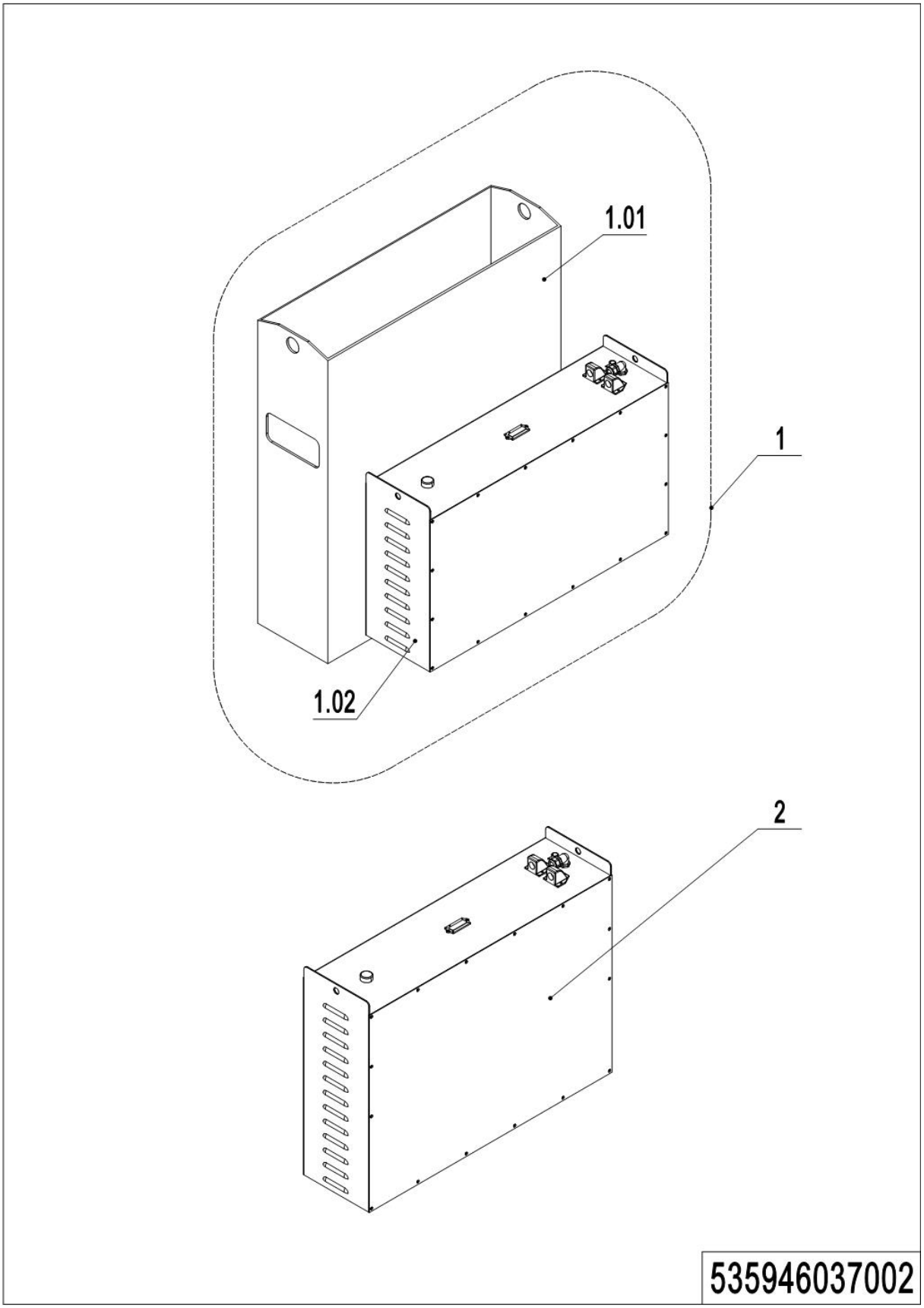


---

**1= Supply as package. 2= Supply with constraints. 3= Phasing-out supply. 4= Supply as assembly. 5= Check other tables.**

## 14 Li Battery (535946037002)

| No. | Item Code | Mark | Item Description | Qty. | Substitute | Note |
|---|---|---|---|---|---|---|
| 1 | 535937010005 | | Li Battery(150Ah) | 1 | | Fudeer |
| 1.01 | 535937010006 | | Battery Box | 1 | | |
| 1.02 | 920600100042 | | Li Battery24V150Ah | 1 | | |
| 2 | 920600100340 | | Li Battery24V150Ah | 1 | | |
| 2 | 920600100342 | | Li Battery24V200Ah | 1 | | |

# Chapter 7: Special Parts

## 01 Load Backrest (532646040501)

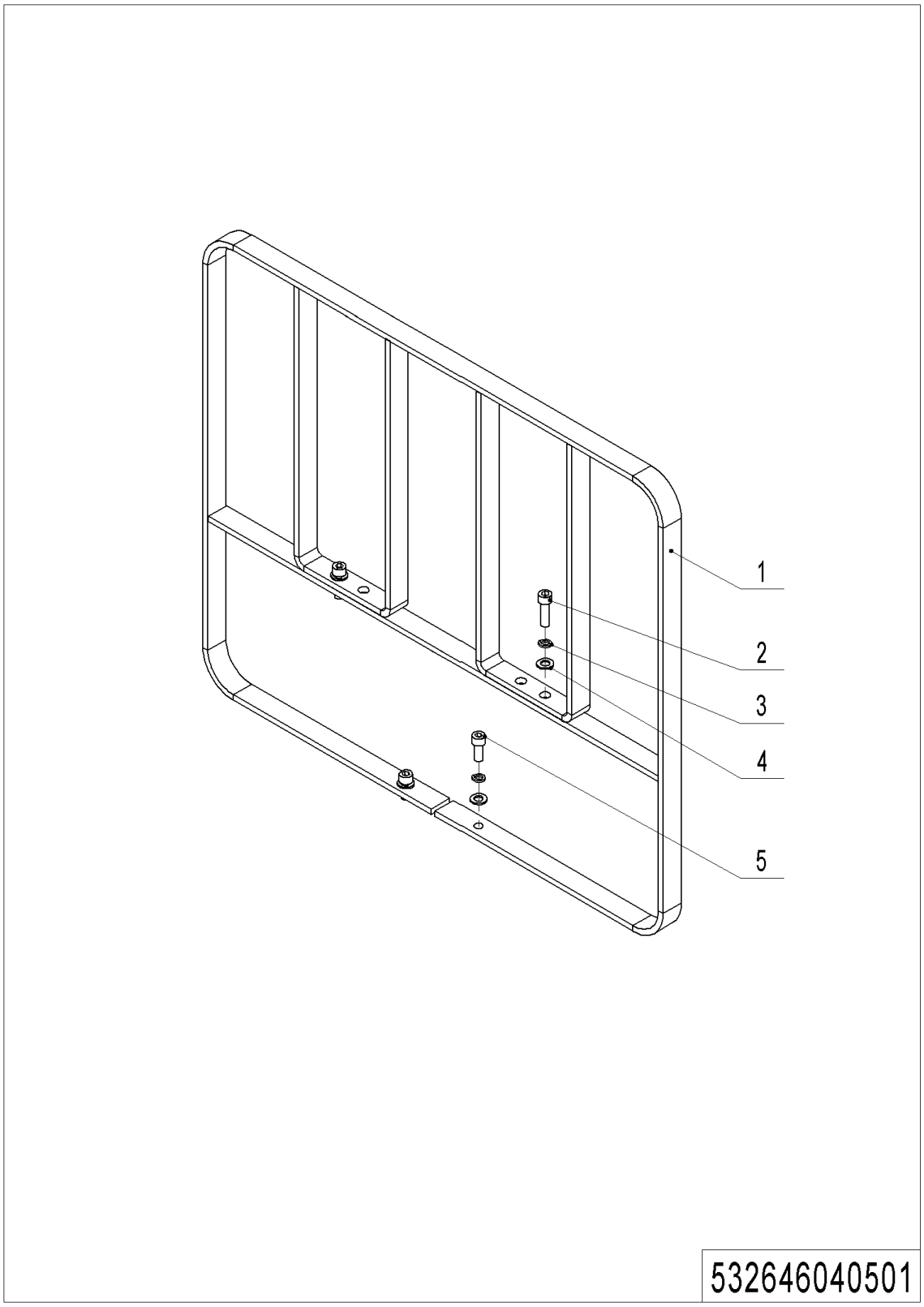


---

**1= Supply as package. 2= Supply with constraints. 3= Phasing-out supply. 4= Supply as assembly. 5= Check other tables.**

## 01 Load Backrest (532646040501)

| No. | Item Code | Mark | Item Description | Qty. | Substitute | Note |
|---|---|---|---|---|---|---|
| 1 | 532640510001 | 2 | Load Backrest | 1 | | |
| 2 | 910200200076 | 1 | Screw | 2 | | |
| 3 | 910400500007 | 1 | Spring Washer | 4 | | |
| 4 | 910400100007 | 1 | Flat Washer | 4 | | |
| 5 | 910200200078 | 1 | Screw | 2 | | |

# Chapter 8: Others

## 01 Label and Decal (EU) (535946047001)

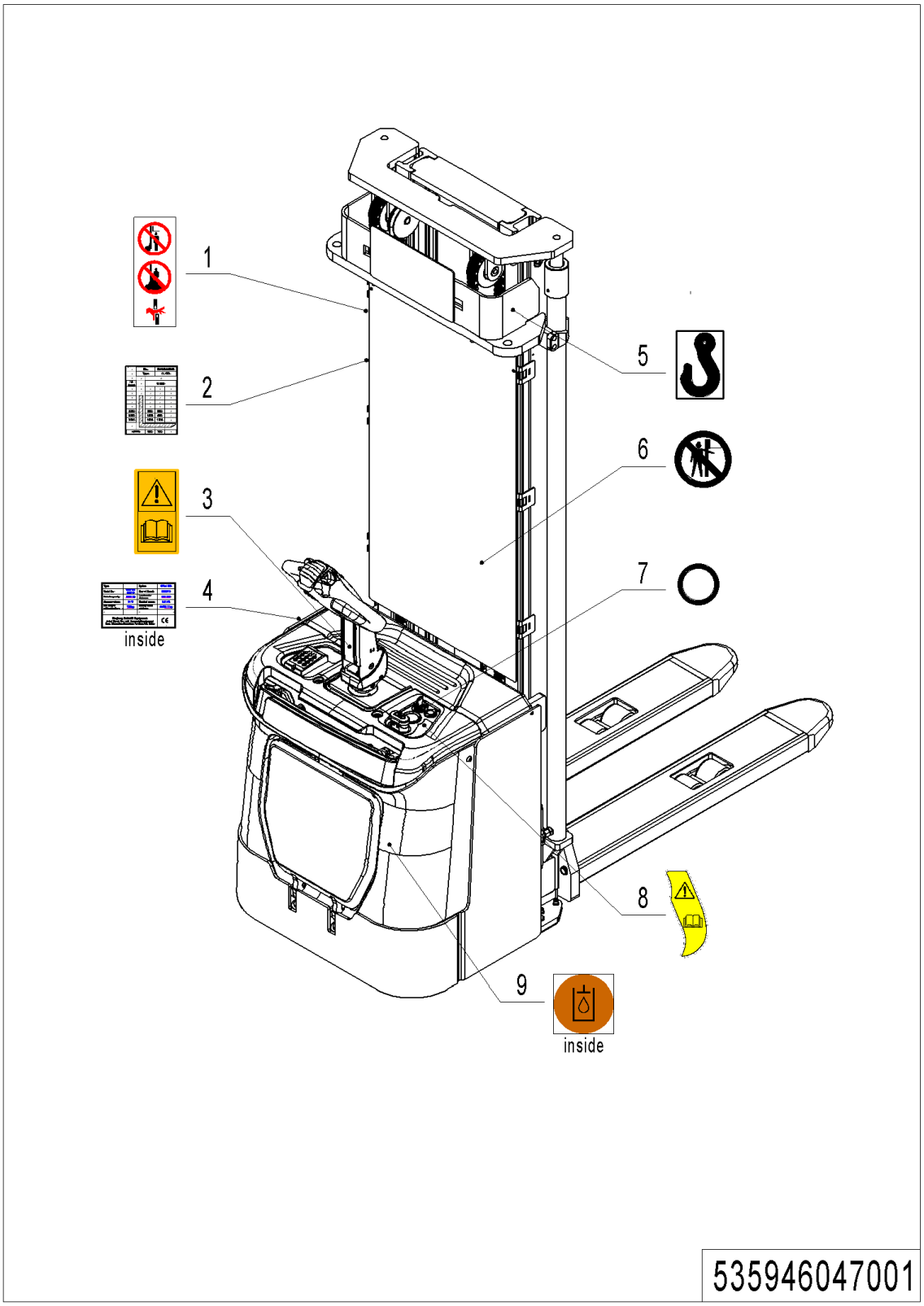

## 01 Label and Decal (EU) (535946047001)

| No. | Item Code | Mark | Item Description | Qty. | Substitute | Note |
|---|---|---|---|---|---|---|
| 1 | 941200100004 | | Label | 2 | | |
| 2 | 535947520007 | | Load Capacity Diagram | 1 | | |
| 3 | 941200300002 | | Label | 1 | | |
| 4 | 535947520001 | | Identification Plate | 1 | | |
| 5 | 941200300001 | | Label | 2 | | |
| 6 | 941200100006 | | Label | 1 | | |
| 7 | 941200400013 | | Label | 1 | | |
| 8 | 941200300018 | | Label | 1 | | |
| 9 | 941200300003 | | Label | 1 | | |

# Appendix

## 01 Electrical Circuit Diagram

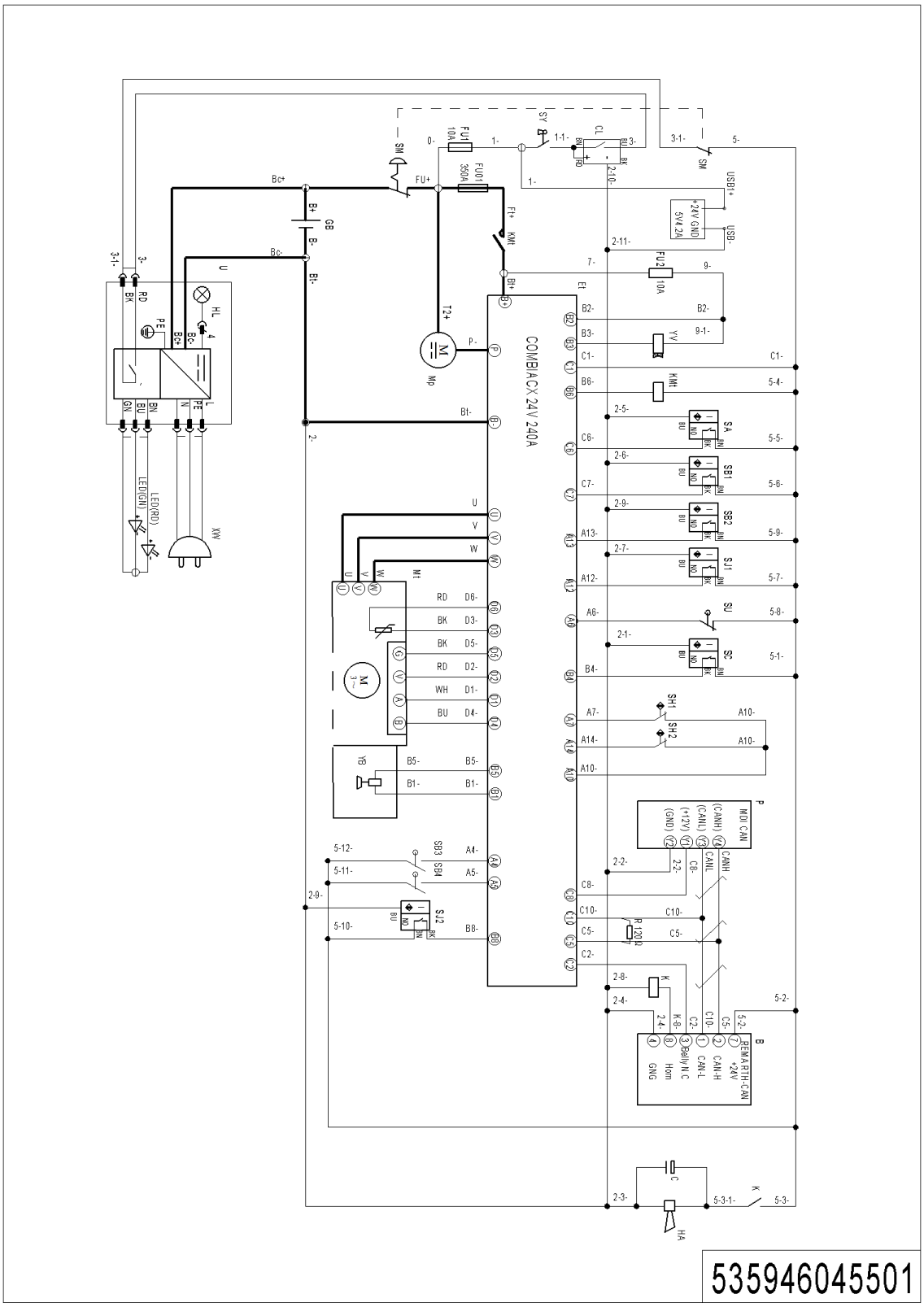

## 02 Electrical Circuit Diagram (EN1175-2020)

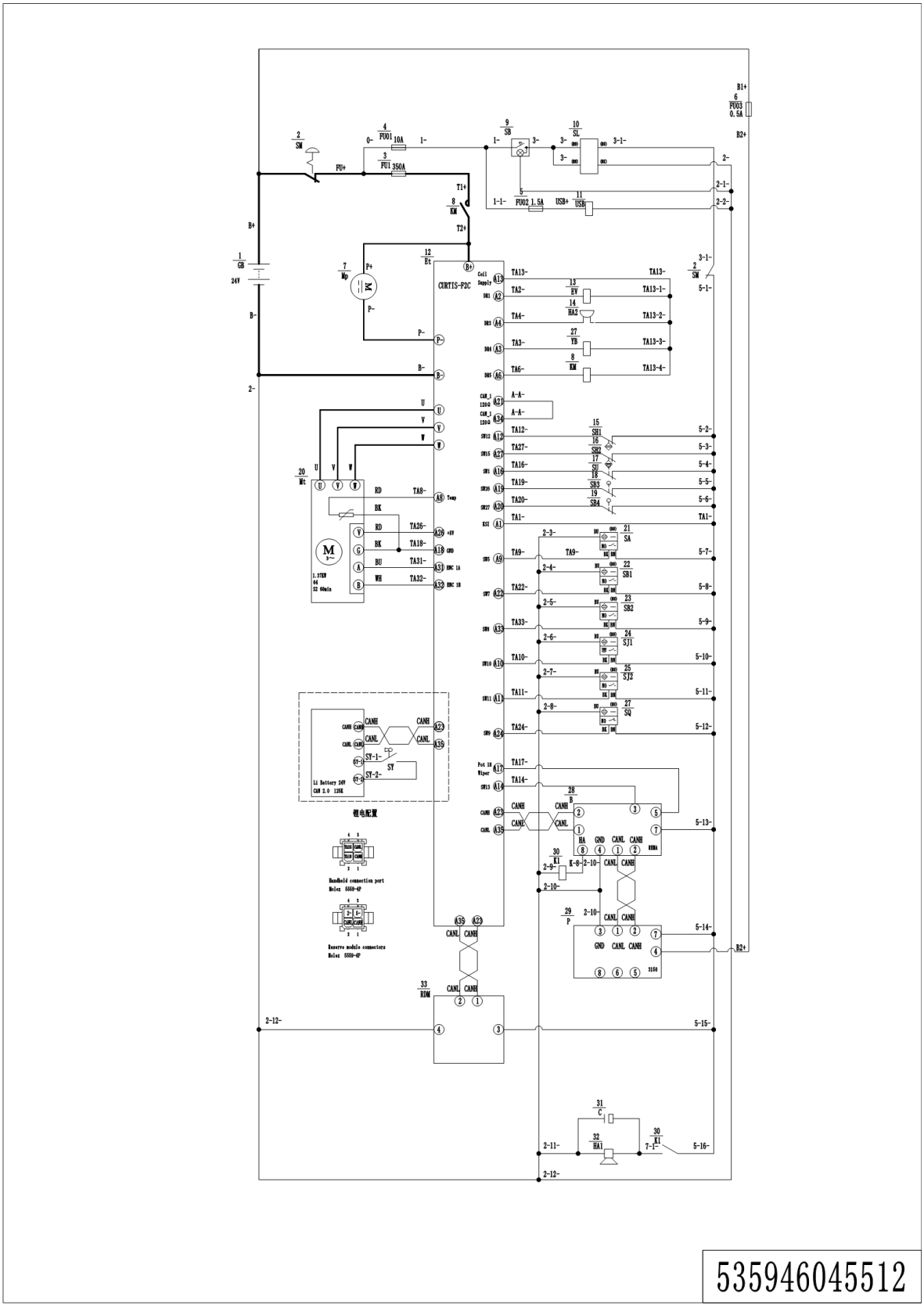

## 03 Electrical Circuit Diagram (Power Steering)

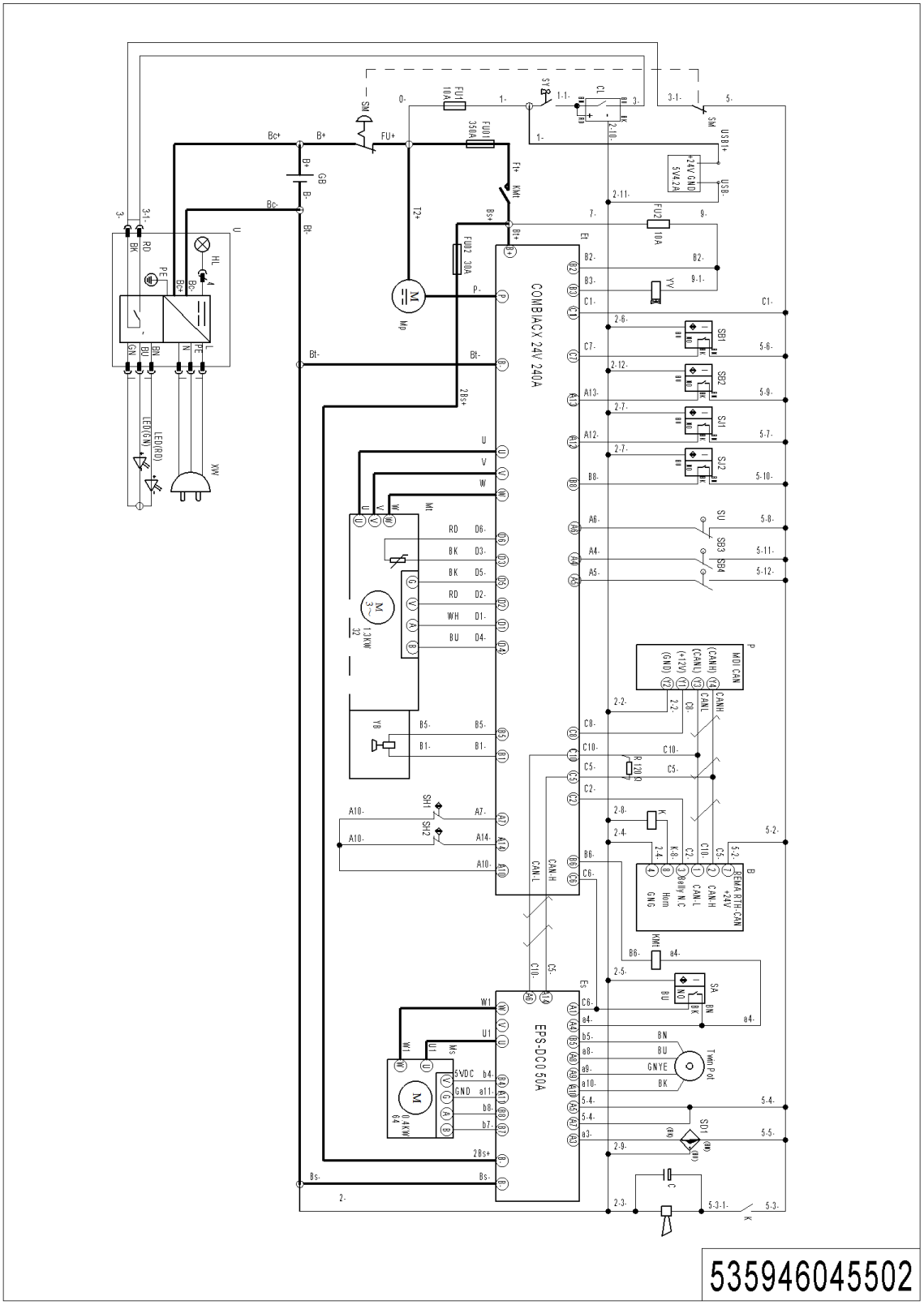

# 04 Electrical Circuit Diagram (Power Steering,EN1175-2020)

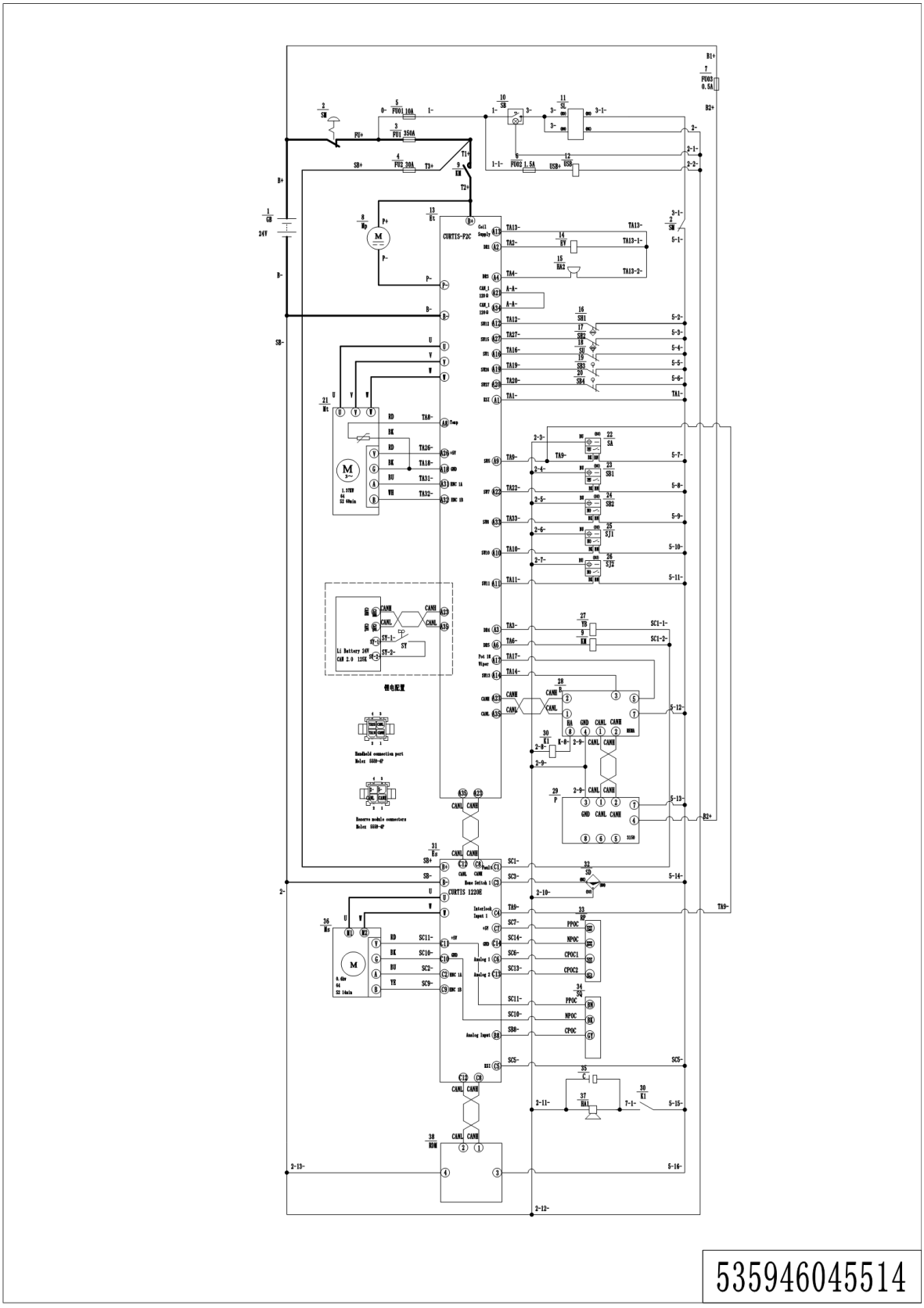

## 05 Hydraulic Circuit Diagram

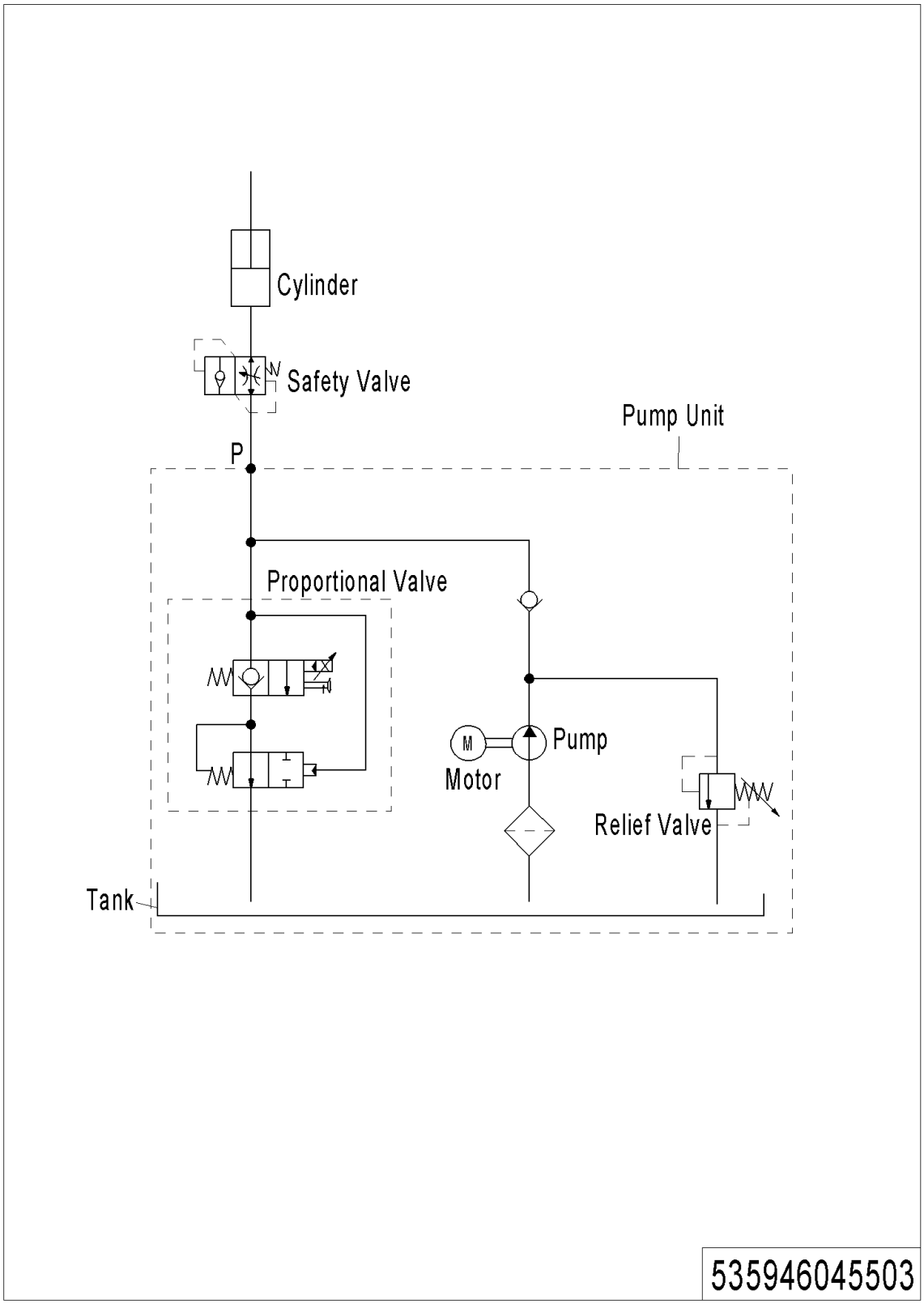

## 06 Consumable Parts List

| No. | Item Code | Item Description | Qty. | Chapter/ Section/ Number |
|---|---|---|---|---|
| 1 | 910700200021 | Bearing | 1 | Chapter 1/01/4 |
| 2 | 505633510000 | Proximity Switch | 1 | Chapter 1/01/7 |
| 3 | 940300400005 | WheelΦ230x70 | 1 | Chapter 1/01/20 |
| 4 | 910700200025 | Bearing | 2 | Chapter 1/01/21 |
| 5 | 910700200007 | Bearing | 1 | Chapter 1/01/27 |
| 6 | 535998510002 | Sensor | 1 | Chapter 1/02/4.02 |
| 7 | 910700200041 | Bearing | 2 | Chapter 1/03/2 |
| 8 | 921800200008 | Potentiometer | 1 | Chapter 1/03/16 |
| 9 | 940300400005 | WheelΦ230x70 | 1 | Chapter 1/03/20 |
| 10 | 505733510001 | Proximity Switch | 1 | Chapter 1/03/24 |
| 11 | 535998510002 | Sensor | 1 | Chapter 1/04/4.02 |
| 12 | 535998520004 | Safety Element | 1 | Chapter 1/04/4.05 |
| 13 | 534498510008 | Carbon Brush | 1 | Chapter 2/02/2 |
| 14 | 940500200008 | Bushing | 4 | Chapter 3/02/15 |
| 15 | 534721510003 | Roller | 6 | Chapter 3/02/29 |
| 16 | 910700200017 | Bearing | 12 | Chapter 3/02/29.02 |
| 17 | 940200300004 | Compound Roller | 28 | Chapter 3/05/1 Chapter 4/01/38 Chapter 4/02/36 |
| 17 | 940200300004 | Compound Roller | | Chapter 4/03/45 Chapter 4/04/59 |
| 18 | 534798510005 | Seal Kit | 2 | Chapter 4/01/7.01 |
| 19 | 920200300001 | Microswitch | 2 | Chapter 4/01/17 Chapter 4/02/20 |
| 20 | 535933510013 | Switch | 4 | Chapter 4/01/24 Chapter 4/02/27 Chapter |
| 20 | 535933510013 | Switch | | Chapter 4/04/37 |
| 21 | 535933510014 | Switch | 3 | Chapter 4/01/24 Chapter 4/02/27Chapter |
| 22 | 535933510016 | Switch | 3 | Chapter 4/01/24 Chapter 4/02/27Chapter |
| 23 | 535933510005 | Switch | 3 | Chapter 4/01/26 Chapter 4/02/31Chapter |
| 24 | 534798510002 | Seal Kit | 2 | Chapter 4/02/12.01 |
| 25 | 534798510003 | Seal Kit | 1 | Chapter 4/02/48.01 |
| 26 | 534798510004 | Seal Kit | 2 | Chapter 4/03/17.01 |
| 27 | 534798510000 | Seal Kit | 2 | Chapter 4/04/16.01 |
| 28 | 535933510018 | Switch | 1 | Chapter 4/04/37 |

---

**1= Supply as package. 2= Supply with constraints. 3= Phasing-out supply. 4= Supply as assembly. 5= Check other tables.**

| | | | | |
|---|---|---|---|---|
| 29 | 535933510012 | Switch | 1 | Chapter 4/04/37 |
| 30 | 535933510017 | Switch | 1 | Chapter 4/04/37 |
| 31 | 534798510001 | Seal Kit | 1 | Chapter 4/04/58.01 |
| 32 | 506733510002 | Proximity Switch | 1 | Chapter 5/01/12 |
| 33 | 940400100001 | Air Spring | 1 | Chapter 5/01/13 |
| 34 | 940400100045 | Air Spring | 1 | Chapter 5/01/13 |
| 35 | 940500200002 | Bushing | 2 | Chapter 5/01/17 |
| 36 | 532998510001 | Wheel | 4 | Chapter 5/04/1 |
| 37 | 940300300009 | WheelΦ84x70 | 4 | Chapter 5/04/1.01 |
| 38 | 910700200019 | Bearing | 8 | Chapter 5/04/1.02 |
| 39 | 910700400004 | Bearing | 2 | Chapter 5/05/4.03 |
| 40 | 920200100012 | Emergency Button | 1 | Chapter 6/01/3.02 Chapter 6/02/3.02 |
| 41 | 920100100013 | Fuse | 1 | Chapter 6/07/4 Chapter 6/08/7 |
| 41 | 920100100013 | Fuse | | Chapter 6/09/4 Chapter 6/10/9 |
| 42 | 920100200002 | Fuse | 2 | Chapter 6/07/6 Chapter 6/09/7 |
| 42 | 920100200002 | Fuse | | Chapter 6/10/6 |
| 43 | 920100100001 | Fuse | 1 | Chapter 6/09/8 Chapter 6/10/8 |

---

**1= Supply as package. 2= Supply with constraints. 3= Phasing-out supply. 4= Supply as assembly. 5= Check other tables.**