255098501001 驱动系统/DRIVE SYSTEM

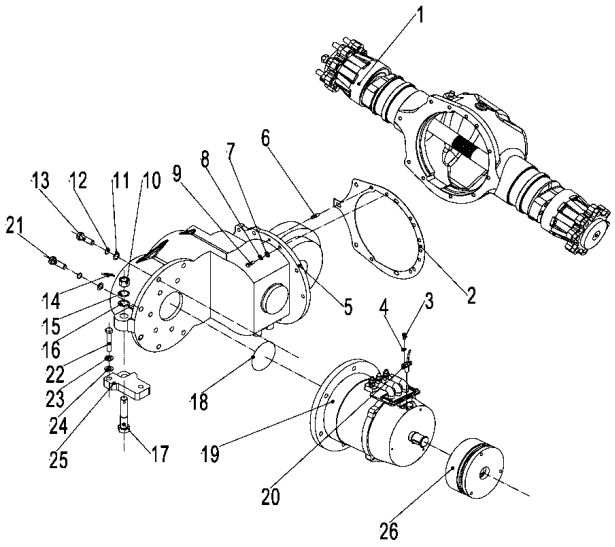

序号/NO	编码/SN	名称	Name	数量/QTY	备注/Remark
1	252113510001	驱动桥	Drive axle	1	
2	255013520005	密封垫	Gasket	1	
3	910200200033	螺钉GB70.1-M6x12-8.8	Screw GB70.1 M6x12-8.8	2	
4	910400500005	弹簧垫圈 GB93-6	Spring washer gb93-6	2	
5	255014010003	变速箱HDCS30B(ZC)	transmission(ZC)	1	
5	252114010001	变速箱HDCS30-00(HY)	transmission(HY)	1	选装
6	910600100021	圆柱销 GB119.2-8x25	Pin GB119.2-8x25	1	
7	910400100007	平垫圈 GB97.1-10-200HV	Washer GB97.1-10-200HV	12	
8	910400500007	弹簧垫圈 GB93-10	Spring washer GB93-10	12	
9	910100400004	螺栓 GB5786-M10x1.25x30-8.8	Bolt GB5786-M10x1.25x30-8.8	12	
10	910300900002	螺母 GB6178-M20-8	Nut GB6178 M20-8	1	
11	910400100009	平垫圈 GB97.1-14-200HV	Washer GB97.1-14-200HV	5	
12	910400500009	弹簧垫圈 GB93-14	Spring washer gb93-14	5	
13	910100200018	螺栓 GB5785-M14x1.5x120-10.9	Bolt GB5785-M14x1.5x120-10.9	3	
14	910600600037	开口销 GB91-4x40	Pin GB91-4x40	1	
15	910400500012	弹簧垫圈 GB93-20	Spring washer GB93-20	1	
16	910400100012	平垫圈 GB97.1-20-200HV	Washer GB97.1-20-200HV	1	
17	910100500006	螺栓 tGB31.1-M20x90-8.8	Bolt tGB31.1 M20x90-8.8	1	
18	910800100020	O形圈 90x2.65	O-ring 90x2.65	1	
19	920900100092	电机(WN)	Motor(WN)	1	
20	252198513251	传感器（插入式WN）	Sensor(WN)	1	
21	910100200019	螺栓 GB5785-M14x1.5x160-10.9	Bolt GB5785 - M14x1.5x160-10.9	2	
22	910100300053	螺栓GB5782-M12x45-8.8	Bolt GB5782 M12x45-8.8	2	
23	910400100008	平垫圈 GB97.1-12-200HV	Washer GB97.1-12-200HV	2	
24	910400500008	弹簧垫圈GB93-12	Spring washer GB93-12	2	
25	255014022001	过渡块	The transition piece	1	
26	252132010001	电磁制动器	Electromagnetic brake	1	

255098501002 驱动桥(东皖) /DRIVE AXLE

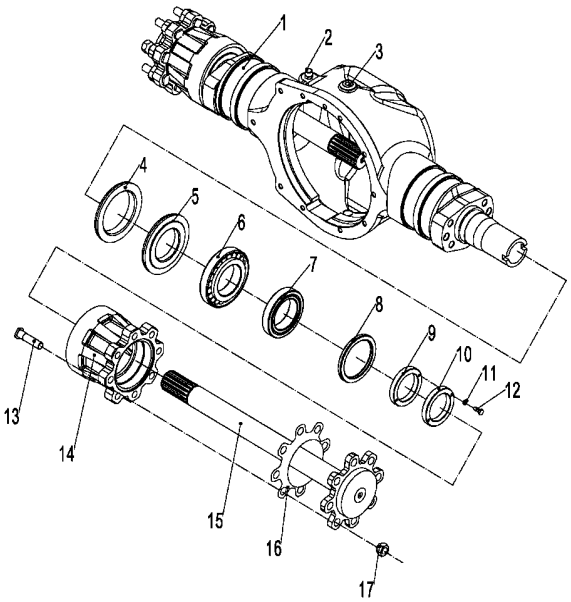

序号/NO	编码/SN	名称	Name	数量/QTY	备注/Remark
1	252198523501	桥壳	Bridge shell	1	东
2	254198523503	通气塞总成	Vent plug assembly	1	
3	254198523504	内六角螺塞	Hexagon socket plug	3	
4	254198523516	油封SC100X125X12	Oil seal SC100X125X12	2	
5	254198523515	轴承挡圈	Bearing retainer	2	
6	254198523514	轴承30213E	Bearing 30213E	2	
7	252198523513	轴承32012	Bearing 32012	2	
8	252198523502	骨架油封TC85X100X9	Framework oil seal TC85X100X9	2	
9	252198523503	螺母座	Nut seat	2	
10	252198523504	螺母座挡圈	Nut seat retainer ring	2	
11	941100200014	螺栓M6x14-4.8	Bolt M6x14-4.8	4	
12	910400500005	弹簧垫圈GB93-6	Spring washer GB93-6	4	
13	254198523520	轮毂螺栓	Hub bolt	16	
14	252198523505	轮毂	Wheel hub	2	
15	252198523506	半轴	Half shaft	2	
16	252198523507	半轴垫	Half shaft pad	2	
17	253098526041	轮毂螺母	Wheel hub nut	16	

255098501003 变速箱(ZC)/GEARBOX(ZC)

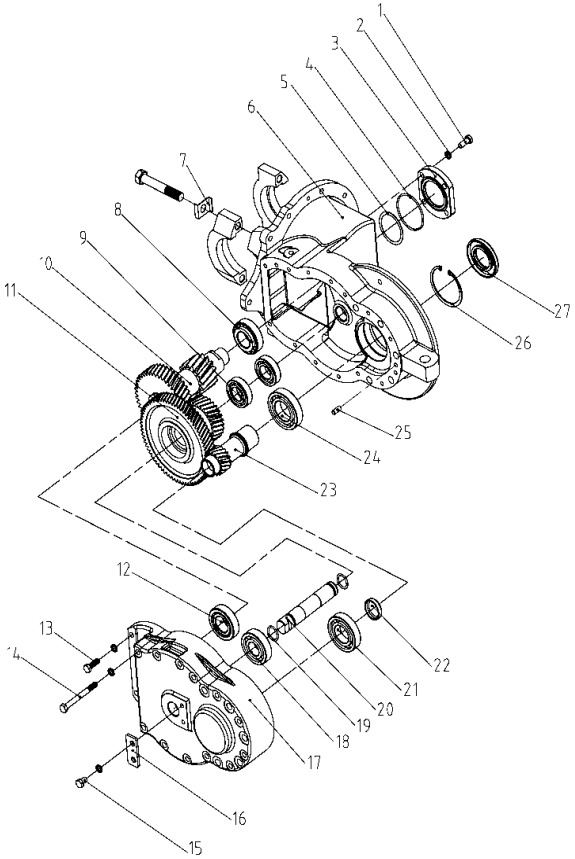

序号/NO	编码/SN	名称	Name	数量/QTY	备注/Remark
1	910100300036	螺栓M10×25	Bolt M10×25	4	ZC
2	910400500007	弹簧垫圈10	Spring washer 10	20	ZC
3	255098524050	轴承盖Y30H-09001	Bearing cap Y30H-09001	1	ZC
4	910800100032	O型圈75×3.1	O-ring 75×3.1	1	ZC
5	255098524051	齿轴垫片Y30H-09002A	Gear shaft gasket Y30H-09002A	AR	ZC
5	255098524052	齿轴垫片Y30H-09002B	Gear shaft gasket Y30H-09002B	AR	ZC
5	255098524053	齿轴垫片Y30H-09002C	Gear shaft gasket Y30H-09002C	AR	ZC
5	255098524054	齿轴垫片Y30H-09002D	Gear shaft gasketY30H-09002D	AR	ZC
6	255098524055	箱体组件HDCSB30-01200	Body components HDCSB30-01200	1	ZC
7	255098524056	轴承座锁片YQX25-01008	Lock plate of bearing seat YQX25-010	4	ZC
8	255098524023	圆锥滚子轴承32207	Bearing 32207	2	ZC
9	910700200021	深沟球轴承6206	Bearing 6206	2	ZC
10	255098524057	齿轴HDCSB30-04000-1	Axis HDCSB30-04000-1	1	ZC
11	255098524058	双联齿轮HDCSB30-03000-1	Duplicate gear HDCSB30-03000-1	1	ZC
12	910100300039	螺栓 M10X40	Bolt M10X40	2	ZC
13	910100100125	螺栓 M10X100	Bolt M10X100	12	ZC
14	910100300034	螺栓 M10X16	Bolt M10X16	2	ZC
15	255098524059	挡块HDCS25-03001	Link stopper HDCS25-03001	1	ZC
16	255098524060	箱盖HDCSB30-01002	Case cover HDCSB30-01002	1	ZC
17	255098524042	深沟球轴承6306	Bearing 6306	1	ZC
18	255098524010	O型圈 25X2.65	O-ring 25X2.65	2	ZC
19	255098524061	轴HDCSB30-03003	Axis HDCSB30-03003	1	ZC
20	910700200023	深沟球轴承 6208	Bearing 6208	1	ZC
21	255098524062	密封盖HDCSB30-02002	Seal cover HDCSB30-02002	2	ZC
22	255098524063	输入轴HDCSB30-02001-1	Input axis HDCSB30-02001-1	1	ZC
23	910700200024	深沟球轴承 6209	Bearing 6209	1	ZC
24	910600100029	圆柱销10X24	Pin 10X24	2	ZC
25	255098524044	孔用弹性挡圈 85	Cip 85	1	ZC
26	255098524064	油封TG4 45X85X10 HDCSB30-01003	Oil seal TG4 45X85X10 HDCSB30-01	1	ZC

255098501004 差速器(ZC)/DIFFERENTIAL MECHANISM(ZC)

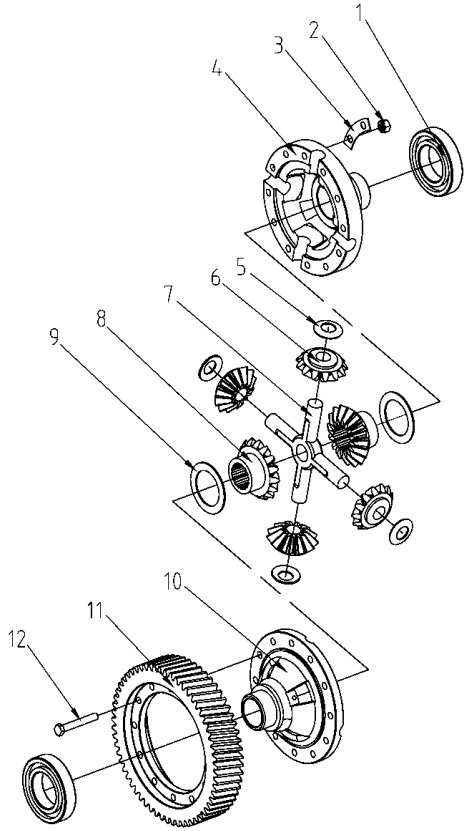

序号/NO	编码/SN	名称	Name	数量/QTY	备注/Remark
1	910700200026	深沟球轴承6211	Bearing 6211	2	ZC
2	910300200002	螺母M10×1.25	Nut M10×1.25	12	ZC
3	255098524064	齿圈锁片YQX25-10009	Gear rim lock YQX25-10009	6	ZC
4	255098524065	左差速器壳YQX25-10009	Left differential housing YQX25-10009	1	ZC
5	255098524066	行星垫圈YQX25-10004	Planetary washer YQX25-10004	4	ZC
6	255098524067	行星齿轮YQX25-10005	Planet gear YQX25-10005	4	ZC
7	255098524068	十字轴YQX25-10003	Universal joint pin YQX25-10003	1	ZC
8	255098524069	半轴齿轮YQX25-10007	Half shaft gear YQX25-10007	2	ZC
9	255098524070	半轴垫圈YQX25-10006	Half shaft washer YQX25-10006	2	ZC
10	255098524071	右差速器壳YQX25-10002	Right differential housing YQX25-1000	1	ZC
11	255098524072	齿圈HDCSB30-05001	Gear ring HDCSB30-05001	1	ZC
12	255098524073	齿圈螺栓YQX25-10008	Gear ring bolt YQX25-10008	12	ZC

255098501005 变速箱(HY)/GEARBOX(HY)

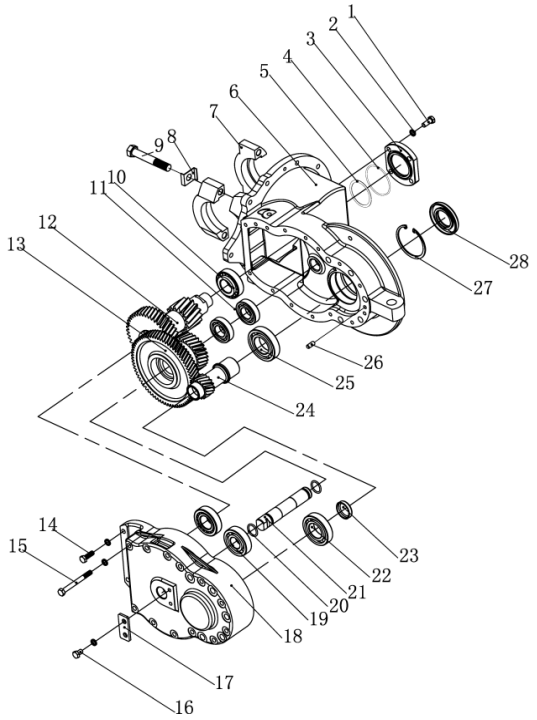

序号/NO	编码/SN	名称	Name	数量/QTY	备注/Remark
1	910100300036	螺栓M10×25	Bolt M10×25	4	HY
2	910400500007	弹簧垫圈10	Spring washer10	20	HY
3	252198521401	轴承盖HDCS25-09	Bearing cap HDCS25-09	1	HY
4	910800100032	O型圈75×3.1	O-ring 75×3.1	1	HY
5	252198521402	齿轴调整垫HDCS25-10	Tooth shaft adjustment pad HDCS25-	AR	HY
6	252198521403	壳体HDCS30-07	Shell HDCS30-07	1	HY
7	252198521404	轴承座HDCS30-08	Bearing pedestal HDCS30-08	4	HY
8	252198521405	锁片HDCS25-13	Lock plate HDCS25-13		HY
9	252198521406	螺栓HDCS30-12	Bolt HDCS30-12		HY
10	255098524023	圆锥滚子轴承32207	Bearing 32207	2	HY
11	910700200021	深沟球轴承6206	Bearing 6206	2	HY
12	252198521407	齿轮2HDCS30-03	Gear2 HDCS30-03	1	HY
13	252198521408	齿轮3HDCS30-04	Gear3 HDCS30-04	1	HY
14	910100300039	螺栓M10X40	Bolt M10X40	2	HY
15	910100100125	螺栓M10X100	Bolt M10X100	12	HY
16	910100300034	螺栓M10X16	Bolt M10X16	2	HY
17	252198521409	定位板HDCS25-06	Location-plate HDCS25-06	1	HY
18	252198521410	箱盖HDCS30-02	Case cover HDCS30-02	1	HY
19	255098524042	深沟球轴承6306	Bearing 6306	1	HY
20	255098524010	O型圈 25X2.65	O-ring 25X2.65	2	HY
21	252198521411	二轴HDCSB30-05	Biaxial HDCSB30-05	1	HY
22	910700200023	深沟球轴承 6208	Bearing 6208	1	HY
23	252198521412	闷盖EC32X5	Cover EC32X5	2	HY
24	252198521413	输入轴HDCSB30-06	Input axis HDCSB30-06	1	HY
25	910700200024	深沟球轴承 6209	Bearing 6209	1	HY
26	910600100029	圆柱销10*24	Pin 10*24	2	HY
27	255098524044	孔用弹性挡圈 85	Cip 85	1	HY
28	252198521414	油封TC45X85X10	Oil seal TC45X85X10	1	HY

255098501006 差速器(ZC)/DIFFERENTIAL MECHANISM(ZC)

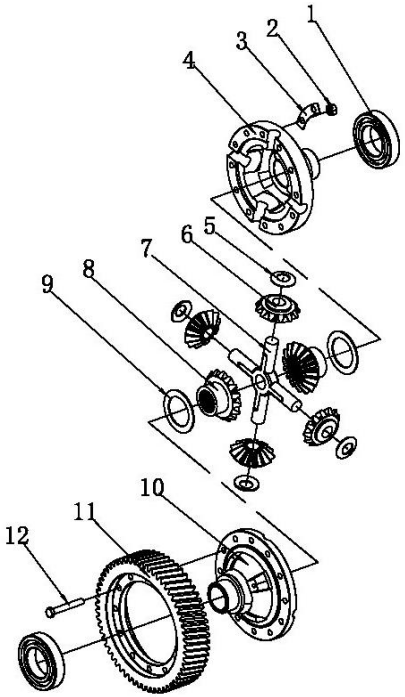

序号/NO	编码/SN	名称	Name	数量/QTY	备注/Remark
1	910700200026	深沟球轴承6211	Bearin 6211	2	HY
2	910300200002	螺母M10×1.25	Nut M10×1.25	12	HY
3	252198521415	锁片1 HDCS30-01-02	Locking plate HDCS30-01-02	6	HY
4	252198521416	右差速器壳HDCS30-01-12	Right differential housing HDCS30-01-	1	HY
5	252198521417	止推垫片2HDCS30-01-10	Thrust washer2 HDCS30-01-10	4	HY
6	252198521418	行星齿轮HDCS30-01-09	Planetary gear HDCS30-01-09	4	HY
7	252198521419	十字轴HDCS30-01-11	Universal joint pinHDCS30-01-11	1	HY
8	252198521420	半轴齿轮HDCS30-01-04	Axle shaft gear HDCS30-01-04	2	HY
9	252198521421	止推垫片1HDCS30-01-05	Thrust washer1 HDCS30-01-05	2	HY
10	252198521422	左差速器壳HDCS30-01-08	Lift differential housing HDCS30-01-08	1	HY
11	252198521423	齿轮HDCS30-01-01	Gear HDCS30-01-01	1	HY
12	252198521424	螺栓HDCS30-01-03	Bolt HDCS30-01-03	12	HY

255098501007 前后轮总成/WHEEL ASSEMBLY

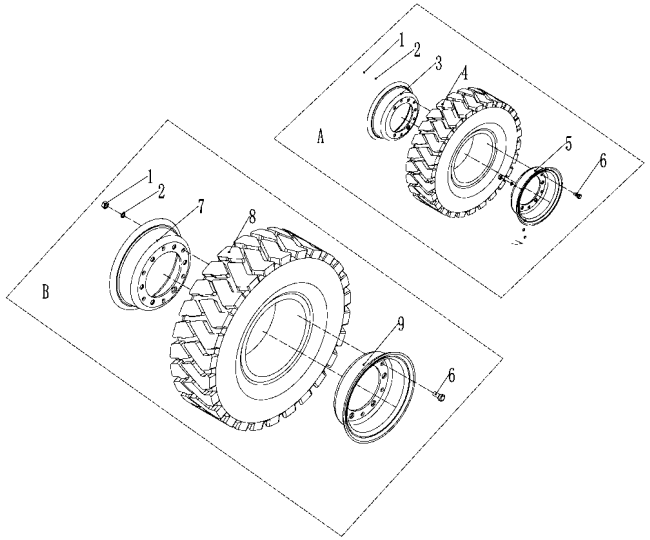

序号/NO	编码/SN	名称	Name	数量/QTY	备注/Remark
A	255015510004	转向轮总成18x7-8(实心)	Steering wheel assembly 18x7-8(soild	2	
	255015510005	转向轮总成18x7-8(环保)	Steering wheel assembly 18x7-8(envir	2	选装/Optional
1	910300200003	螺母GB6171-M12x1.25-10	Nut GB6171-M12x1.25-10	24	
2	910400500008	弹簧垫圈GB93-12	Spring washerGB93-12	24	
3	255015520001	外轮辋4.33R	Outer rim 4.33R	2	
4	255015510002	轮胎18x7-8(实心)	Tire 18x7-8(solid)	2	
	255015510006	轮胎18x7-8(环保)	Tire 18x7-8(environmentally)	2	
5	255015520002	内轮辋4.33R	Rim within 4.33 R	2	
6	255013020001	轮辋螺栓M12x1.25x26	Rim bolt m12x1.25x26	24	
B	254115510005	转向轮总成5.00-8-10PR(充气)	Steering wheel assembly 5.00-8-10PR	2	
	254115510006	转向轮总成5.00-8(实心)	Steering wheel assembly 5.00-8(solid)	2	选装/Optional
	254115510007	转向轮总成5.00-8(环保)	Steering wheel assembly 5.00-8(envir	2	选装/Optional
7	254115520001	外轮辋3.00D-8	The outer rim3.00D-8	2	
8	254115510001	轮胎5.00-8-10PR(充气)	Tire 5.00-8-10PR(gas)	2	
	254115510003	轮胎5.00-8(实心)	Tyre 5.00-8(solid)	2	
	254115510004	轮胎5.00-8(环保)	Tyre 5.00-8(environmentally friendly)	2	
9	254115520002	内轮辋3.00D-8	Within the rim 3.00D-8	2	

255098501008 起升电机安装/MOTOR INSTALLATION

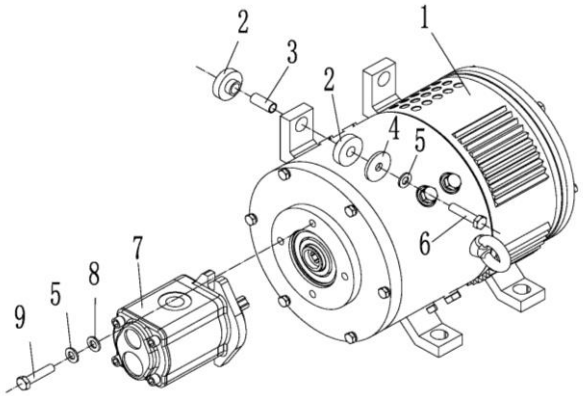

序号/NO	编码/SN	名称	Name	数量/QTY	备注/Remark
1	920900100036	电机WN(DC)	Motor (DC)	1	
	920900100071	电机WN(AC)	Motor (AC)	1	选装/Optional
	255098513253	编码器（WN）	Encoder(WN)	1	选装/Optional
2	255032520003	减振垫	Damping pad	8	
3	255032520001	衬套 Φ13xΦ10.5x32	Bushing Φ13XΦX10.5x32	4	
4	255032520002	垫圈 Φ40xΦ11x4	Gasket Φ40xΦ11x4	4	
5	910400500007	弹簧垫圈 GB93-10	Spring washer GB93-10	6	
6	910100100034	螺栓 GB5782-M10x55-8.8	Bolt GB5782 M10x55-8.8	4	
7	254123512006	齿轮泵	Gear pump	1	
8	910400100007	垫圈 GB97.1-10-200HV	Gasket GB97.1-10-200HV	6	
9	910100300037	螺栓GB5783-M10x30-8.8	Bolt GB5783 M10x30-8.8	2	

255098501009 转向装置及安装/STEERING GEAR AND INSTALLATION

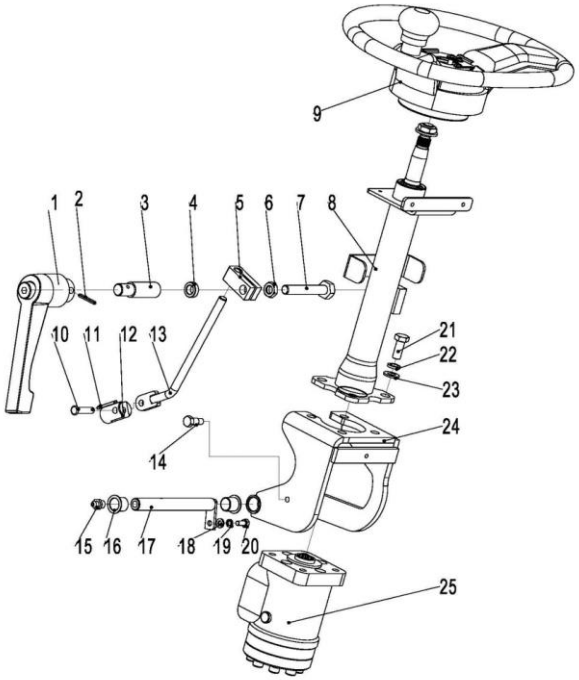

序号/NO	编码/SN	名称	Name	数量/QTY	备注/Remark
1	255015010007	可调手柄	The adjustable handle	1	
2	910600400011	弹性圆柱销GB879.1-4x30	Elastic cylinder pin GB879.1-4x30	1	
3	255015020025	夹柄螺套	Clamp holder screw sets	1	
4	910400100008	垫圈Φ20xΦ12x8	GasketΦ20XΦ12X8	1	
5	255015020019	锁紧块	Locking block	1	
6	910300300006	螺母GB6172.1-M12-05	Nut GB6172.1-M12-05	1	
7	910100300057	螺栓GB5783-M12x70-8.8	Bolt GB5783 M12x70-8.8	1	
8	255015010001	转向管柱总成	Steering string assembly	1	
9	255015010003	方向盘	The steering wheel	1	
10	910600700014	销轴GB882-6x26x1.6	Pin GB882-6x26x1.6	1	
11	910600600005	开口销GB91-1.6x10	Cotter pin GB91-1.6x10	1	
12	255015020002	固定座	The fixed seat	1	
13	255015010005	调节杆焊合	Adjust rod welding	1	
14	255015020021	调节螺钉	Adjust the screw	1	
15	911200100004	油杯JB7940.1-M10x1	Oil cup JB7940.1-M10x1	1	
16	940500200016	复合套(带肩)Φ16xΦ18x16-SF-1	Composite set (shoulder)Φ16xΦ18x16	2	
17	255011510003	带耳轴Φ16x135	With trunnionΦ16x135	1	
18	910400100005	平垫圈GB97.1-6-200HV	WasherGB97.1-6-200HV	1	
19	910400500005	弹簧垫圈GB93-6	Spring washerGB93-6	1	
20	910100300009	螺栓GB5783-M6x12-8.8	Bolt GB5783 M6x12-8.8	1	
21	910100300036	螺栓GB5783-M10x25-8.8	Bolt GB5783 M10x25-8.8	4	
22	910400500007	弹簧垫圈GB93-10	Spring washer gb93-10	4	
23	910400100007	平垫圈GB97.1-10-200HV	Washer GB97.1-10-200HV	4	
24	255015010004	支架焊合	Bracket welded	1	
25	281215010002	转向器BZZ5	Steering BZZ5	1	

255098501010 转向桥及安装/STEERING BRIDGE AND INSTALLATION

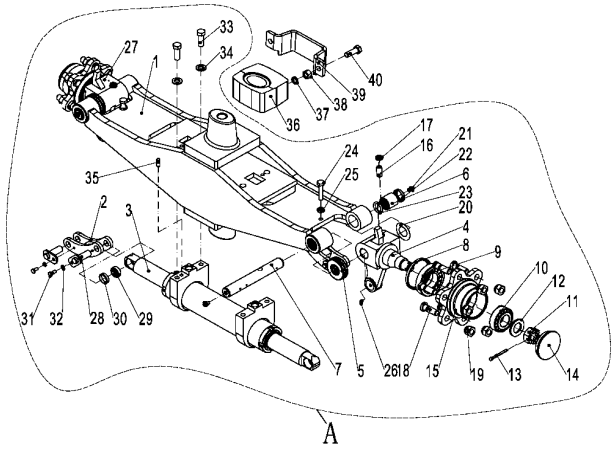

序号/NO	编码/SN	名称	Name	数量/QTY	备注/Remark
A	254116010001	1.5T转向桥	1.5T steering axle	1	
1	254198526001	转向桥体总成	Steering bridge assembly	1	
2	254198526002	连杆	Linking rod	2	
3	254198516003	转向油缸总成	Steering cylinder assembly	1	
4	254198526004	右转向节总成	Right knuckle	1	
5	254198526005	单向推力轴承198905	Bearing198905	2	
6	254198526006	滚针轴承943/25	Bearing 943/25	2	
7	254198526007	转向节主销	Pin	2	
8	254198526009	骨架油封	framework seal ring	2	
9	254198526011	轴承30208	Bearing 30208	2	
10	254198526012	轴承30206	Bearing 30206	2	
11	254198526013	螺母M24x2	Nut M24x2	2	
12	910400100014	垫圈24	Washer GB97.1-24-200HV	2	
13	910600600038	销5x50	Pin 5x50	2	
14	254198526015	轮毂盖	Wheel hub cover	2	
15	254198526016	转向轮毂	Steering wheel hub	2	
16	255098526017	内六角锥端紧定螺钉M12X30	Strict bolt	2	
17	910300100008	螺母M12	Nut GB6170-M12-10	2	
18	254198526040	轮毂螺栓	Rim Bolt	12	
19	254198526041	轮毂螺母	Rim Nut(M14X1.5)	12	
20	254198526010	转向节调整垫	Pad	4	
21	253098526025	弯颈式油嘴Q701B45	Grease nipple (90°)	2	
22	254198516023	铁壳油封	Oil seal	4	
23	254198526022	O型圈	O ring	2	
24	910100300039	螺栓M10x40	Bolt M10X40	2	
25	910300100007	螺母M10	Nut GB6170-M10-10	12	
26	253098526019	直通油嘴Q700B06	Grease nipple	4	
27	254198526020	左转向节	Left knuckle	1	
28	254198526026	连杆销	Linking pin	4	
29	254198526027	关节轴承GE15ES	Joint bearing GE15ES	4	
30	254198526018	衬套	Bushing	4	

255098501010 转向桥及安装/STEERING BRIDGE AND INSTALLATION

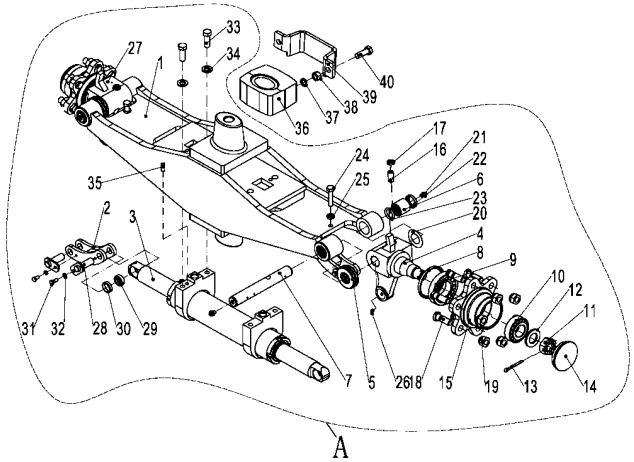

序号/NO	编码/SN	名称	Name	数量/QTY	备注/Remark
31	910100300009	螺栓M6x14	Bolt M6X12	4	
32	910400500005	垫圈6	Spring washer GB93-6	4	
33	910100300052	螺栓M12x35	Bolt M12X35	2	
34	910400500008	垫圈12	Spring Washer GB93-12	4	
35	254198526008	销B8x20	Pin 8x20	2	
36	255016020001	减震垫	Anti vibration pad	2	
37	910300100010	螺母GB6170-M16-10	Nut GB6170-M16-10	4	
38	910400500010	弹簧垫圈GB93-16	Spring washer GB93-16	4	
39	255021520091	固定板	Fixing plate	2	
40	910100300071	螺栓GB5783-M16x45-8.8	Bolt GB5783-M16x45-8.8	4	

255098501011 转向油缸/STEERING CYLINDER

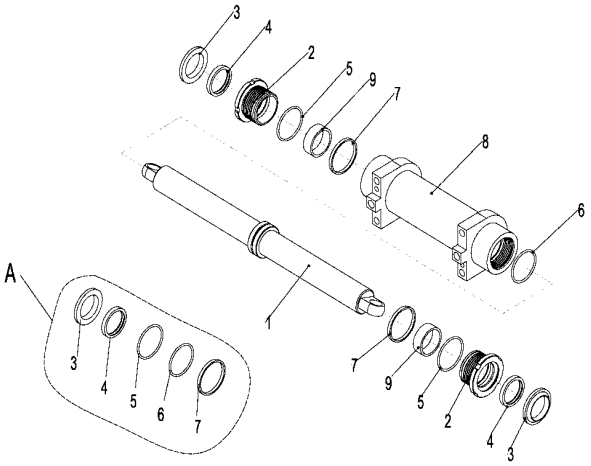

序号/NO	编码/SN	名称	Name	数量/QTY	备注/Remark
A	254198510007	密封件修理包(转向缸-DW)	Sealing part maintenance package (st	1	
1	▲	活塞杆总成	Piston rod assembly	1	
2	▲	缸盖	Cylinder cover	2	
3	▲	防尘圈 DH40	Dust ring DH40	2	
4	▲	U形圈 UN40	U rin UN40	2	
5	▲	O形圈 53×3.55	O-ring53×3.55	2	
6	▲	O形圈 50×3.55	O-ring50×3.55	1	
7	▲	支承环	Support ring	1	
8	▲	缸筒总成	Cylinder assembly	1	
9	▲	钢背轴承	Bearing	2	

255098501012 座椅盖板安装/SEAT COVER MOUNTING

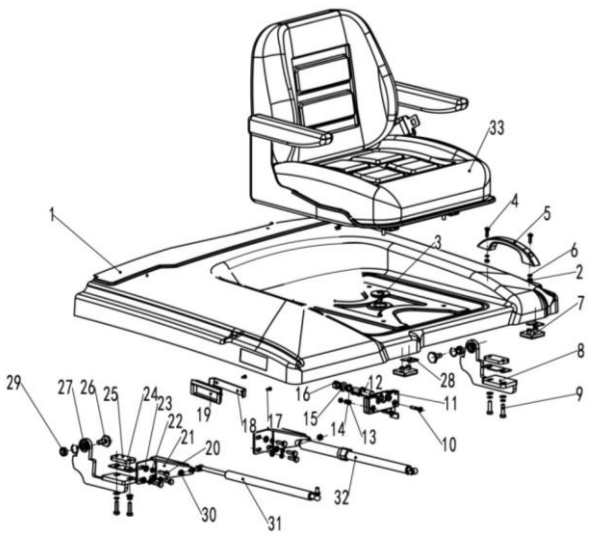

序号/NO	编码/SN	名称	Name	数量/QTY	备注/Remark
1	252121011002	箱盖焊合(20Q锂电)	Welding of box cover (20Q lithium bat	1	
	252121012002	箱盖焊合(20Q铅酸)	Case cover welding (20Q lead acid)	1	
2	910300100005	螺母GB6170-M6-10	Nut GB6170-M6-10	6	
3	255021020046	护线圈	To protect the coil	1	
4	910200500053	螺钉 GB818-M6x20-4.8	Screw GB818 M6x20-4.8	1	
5	255021020020	拉手	Shake handshandle	1	
6	910400500005	弹垫 GB93-6	Spring washers GB93-6	4	
7	255021020068	减振垫	Damping pad	2	
8	255021010005	铰链支架(左)	Hinge bracket (left)	1	
9	910100300024	螺栓 GB5783-M8x30-8.8	Bolt GB5783 M8x30-8.8	4	
10	910200200041	螺钉 GB70.1-M6x40-4.8	Screw GB70.1 M6x40-4.8	3	
11	255021010010	顶盖锁	The lid lock	1	
12	255021020052	锁舌	The lock tongue	1	
13	910400100005	平垫 GB97.1-6-200HV	Washer GB97.1-6-200HV	2	
14	910400500008	弹垫 GB93-12	Spring washer GB93-12	1	
15	910400100008	平垫GB97.1-12-200HV	Washer GB97.1-12-200HV	1	
16	910300100008	螺母 GB6170-M12-10	Nut GB6170 - M12-10	1	
17	910200500021	螺钉 GB818-M4x10-4.8	Screw GB818 M4x10-4.8	2	
18	255021020055	固定板	Fixed plate	1	
19	255021020021	内拉手	The shake handshandle	1	
20	910100300023	螺栓 GB5783-M8x25-8.8	Bolt GB5783 M8x25-8.8	6	
21	255021020047	气弹簧支架	Air spring support	2	
22	910400500006	弹垫 GB93-8	Spring washer GB93-8	10	
23	910400100006	平垫 GB97.1-8-200HV	Washer GB97.1-8-200 hv	10	
24	255021020054	调整垫	Adjust the pad	2	
25	255021020045	丝座板	Wire plate	2	
26	255021020043	铰制孔螺栓M10x28	Reaming hole bolt M10x28	2	
27	255021010006	铰链支架(右)	Hinge bracket (right)	2	
28	255021020071	调整垫片	Adjust the gasket	2	
29	910700900001	轴承GB9163-GE12E	Bearing GB9163-GE12E	2	
30	910300100006	螺母 GB6170-M8-10	Nut GB6170 M8-10	2	

255098501012 座椅盖板安装/SEAT COVER MOUNTING

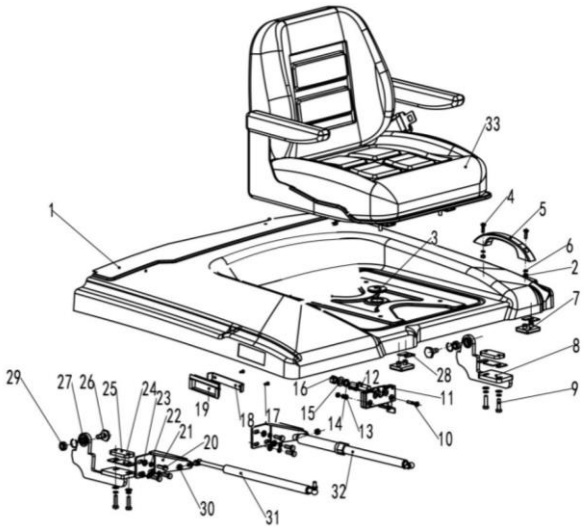

序号/NO	编码/SN	名称	Name	数量/QTY	备注/Remark
31	940400100030	气弹簧200N(D620)	Gas spring 200 n (D620)	1	
32	940400100031	气弹簧500N(D620)-自锁	Air spring 500N(D620)- self locking	1	
33	255037510002	座椅BF1-1BC(标准)	Seat BF1-1BC (STD.)	1	
	255037510003	座椅(舒适型)	Seat (comfort)	1	选装/Optional
	255037510004	座椅(减振型)	Seat (Vibration)	1	选装/Optional

255098501013 侧板安装SIDE PANEL INSTALLATION

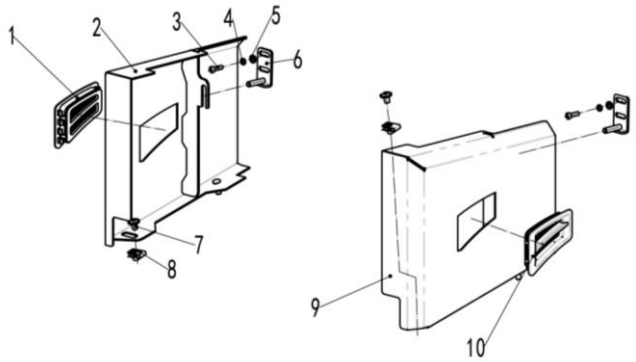

序号/NO	编码/SN	名称	Name	数量/QTY	备注/Remark
1	505621510004	通风孔组件2	Vent assembly 2	1	
2	252121011006	侧板焊合	Weld to the side plate	1	
3	910200200036	螺钉GB70.1-M6x20-8.8	Screw GB70.1 M6x20-8.8	4	
4	910400500005	弹簧垫圈GB93-6	Spring washer GB93-6	4	
5	910400100005	平垫圈GB97.1-6-200HV	Washer GB97.1-6-200HV	4	
6	255021010015	挂钩焊合(左)	Hook welding (left)	2	
7	941100100007	螺钉M10x20-8.8	Screw M10x20-8.8	2	
8	940400400003	板簧螺母M10	Plate spring nut M10	2	
9	252121011005	侧盖板焊合(右)	The left side plate is welded together	1	
10	505621510003	通风孔组件1	Vent assembly 1	1	

255098501014 仪表罩安装/INSTRUMENT COVER INSTALLATION

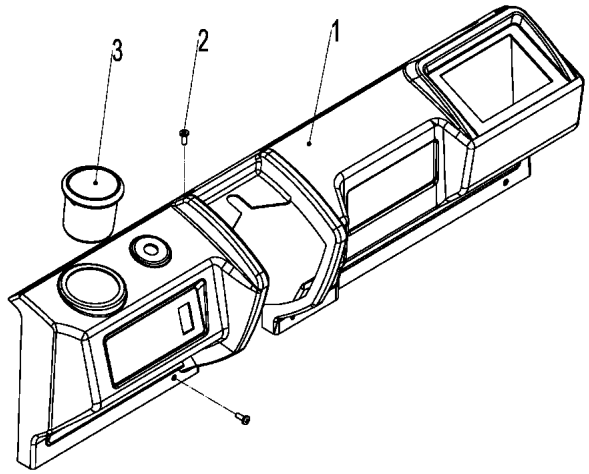

序号/NO	编码/SN	名称	Name	数量/QTY	备注/Remark
1	252110021001	仪表罩	Instrument mask	1	
2	910200300019	螺钉 M6x20	Screw M6x20	7	
3	255010020004	工具盒	Tool box	1	

255098501015 平衡重及安装/BALANCE WEIGHT AND MOUNTING

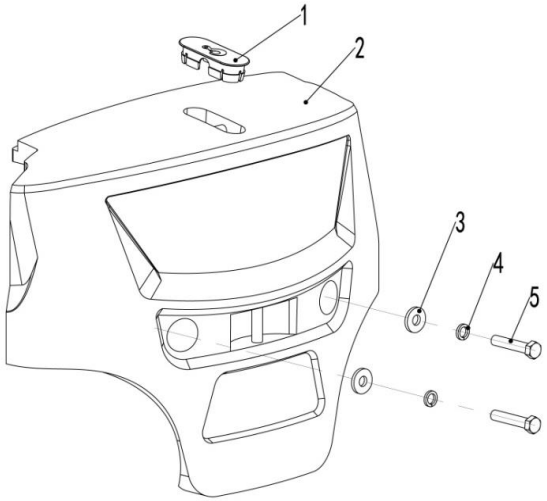

序号/NO	编码/SN	名称	Name	数量/QTY	备注/Remark
1	255023020002	平衡重起吊孔盖	Counterbalance lift hole cover	1	
2	252123021001	平衡重(20Q)	Balance weight (20Q)	1	选装
	252123022001	平衡重(20Q铅酸)	Equilibrium weight (20Q lead acid)	1	选装
	251823021001	平衡重(16Q铅酸)	Equilibrium weight (16Q lead acid)	1	选装
3	255023020007	垫圈Φ60xΦ25x8	Gasket Φ60XΦ25X8	2	
4	910400500013	弹簧垫圈GB93-24	Spring washer GB93-24	2	
5	910100100101	螺栓GB5782-M24x120-8.8	Bolt GB5782 M24x120-8.8	2	

255098501016 液压系统/HYDRAULIC

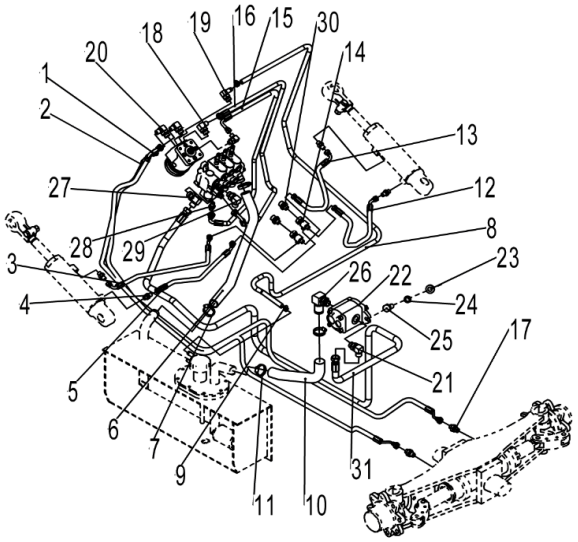

序号/NO	编码/SN	名称	Name	数量/QTY	备注/Remark
1	252123520001	液压管总成(异)8-L2400-1SC-60°	Hydraulic pipe assembly (other)8-L24(	1	
2	252123520009	液压管总成(异)8-L2600-1SC-60°	Hydraulic pipe assembly (other)8-L26(	1	
3	252123520002	液压管总成(135°)6-L600-1SC-60°	Hydraulic tube assembly (135°)6-L60(	1	
4	255023520007	接头(直)6-G1/4—M14x1.5-60°	Joint (straight) 6-g1/4 - m14x1.5-60°	4	
5	252123520003	液压管总成(135°)6-L750-1SC-60°	Hydraulic tube assembly(135°)6-L750-	1	
6	252123520010	胶管(回油)	Rubber hose (oil return)	1	
7	911000600004	喉箍QC/T390-(34-38)	Hose hoops QC/T390-(38-34)	4	
8	900200401001	回油胶管23x5	Oil return hose 23x5	2560	
9	911000600003	喉箍QC/T390-(22-26)	Hose hoops QC/T390-(22-26)	2	
10	252123520004	胶管(吸油)	Rubber hose (oil absorption)	1	
11	911000600006	喉箍QC/T390-(40-45)	Hose hoops QC/T390-(40-45)	2	
12	252123520005	液压管总成(90°)6-L450-1SC-60°	Hydraulic tubing assembly(90°)6-L450	1	
13	252123520006	液压管总成(135°)6-L500-1SC-60°	Hydraulic tube assembly(135°)6-L500-	1	
14	255023510012	接头(三通)7-2xM14x1.5-M16x1.5-60°	Joint (tee) 7-2xm14x1.5-m16x1.5-60°	2	
15	252123520011	液压管总成(90°)6-L1320-1SC-60°	Hydraulic tubing assembly (90°)6-L13	1	
16	251123521005	液压管总成(90°)8-L1320-1SC-60°	Hydraulic tube assembly(90°)8-L1320-	1	
17	255023520034	接头(直)8-2xM16x1.5-60°	Joint(straight) 8-2xm16x1.5-60°	2	
18	255023510003	接头(锁定弯)6-G1/4-M14x1.5-60°	Joint(lock bend) 6-G1/4-M14x1.5-60°	1	
19	255023510008	接头(锁定弯)11-M20x1.5-0	Joint(lock bend)11-M20x1.5-0	1	
20	255023510007	接头(锁定弯)10-M20x1.5-M16x1.5-60°	Joint(lock bend)10-M20x1.5-M16x1.5-	3	
21	255023520035	接头(锁定弯)12-G1/2-M22x1.5-60°	Joint(lock bend)12-G1/2-M22x1.5-60 °	1	
22	251323512006	齿轮泵	Gear pump	1	
23	910400100007	平垫圈GB97.1-10-200HV	Washer GB97.1-10-200HV	2	
24	910400500007	弹簧垫圈GB93-10	Spring washer GB93-10	2	
25	910100300037	螺栓GB5783-M10x30-8.8	Bolt GB5783 M10x30-8.8	1	
26	255023510005	接头(转向弯)25-G1-Φ32	Joint(to bend)25-G1-Φ32	1	
27	255023520030	接头(直)12-2xM22x1.5-60°	Joint(straight)12-2xM22x1.5-60°	1	
28	255023510001	接头(锁定弯)6-M12x1.5-M14x1.5-60°	Joint(lock bend)6-m12x1.5-M14x1.5-6	1	
29	255044020143	接头(锁定弯)12-M20x1.5-M22x1.5-60°	Joint(lock bend) 12-M20x1.5-M22x1.5-	1	
30	255023520033	接头(直)8-M20x1.5-M16x1.5-60°	Joint(straight)8-M20x1.5-M16x1.5-60°	1	
31	255023520004	液压管总成(90°)13-L2750-2SC-60°	Hydraulic tubing assembly(90°)13-L27	1	

255098501017 多路换向阀操纵(二联)/MULTI-WAY REVERSING VALVE CONTROL(TWO)

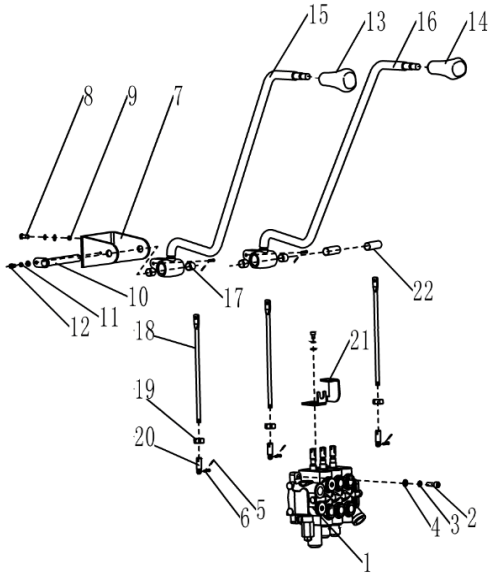

序号/NO	编码/SN	名称	Name	数量/QTY	备注/Remark
1	252024510011	多路阀(二联)	Multiple valve (double)	1	
2	910100400006	螺栓GB5786-M10x1.25x40-8.8	Bolt GB5786-M10x1.25x40-8.8	4	
3	910400500007	弹簧垫圈GB93-10	Spring washer GB93-10	8	
4	910400100007	平垫圈GB97.1-10-200HV	Washer GB97.1-10-200HV	12	
5	941100800001	销轴B4.75x20-c1B	Pin B4.75x20-c1B	4	
6	910600600011	开口销GB91-2x12	Cotter pin GB91-2x12	4	
7	252124520002	支架(阀杆)	Support (stem)	1	
8	910100300037	螺栓GB5783-M10x30-8.8	Bolt GB5783 M10x30-8.8	4	
9	910300100007	螺母GB6170-M10-10	Nut GB6170-M10-10	4	
10	255024510009	带耳轴Φ16x168	With trunnion Φ16x168	1	
11	910400500005	弹簧垫圈GB93-6	Spring washer GB93-6	1	
12	910200200032	螺钉GB70.1-M6x10-8.8	Screw GB70.1 M6x10-8.8	1	
13	253524520010	手柄球(起升)	Handle ball(lift)	1	
14	253524520009	手柄球(倾斜)	Handle ball(tilt)	1	
15	256824510002	操纵杆焊合(起升)	Joystick welding(lifting)	1	
16	256824510003	操纵杆焊合(倾斜)	Joystick welding(tilt)	1	
17	940500100006	复合套Φ16xΦ18x15-SF-1	Composite set Φ16xΦ18x15-SF-1	4	
18	252124520003	连接杆	Connecting rod	2	
19	910300100006	螺母GB6170-M8-10	Nut GB6170 M8-10	2	
20	255025020003	接头	joint	2	
21	253524520014	支架(行程开关)	Bracket (travel switch)	2	
22	255024520028	轴套Φ29xΦ16x38	Shaft sleeveΦ29xΦ16x38	2	

255098501018 多路换向阀操纵(三联)MULTI-WAY REVERSING VALVE CONTROL(THREE)

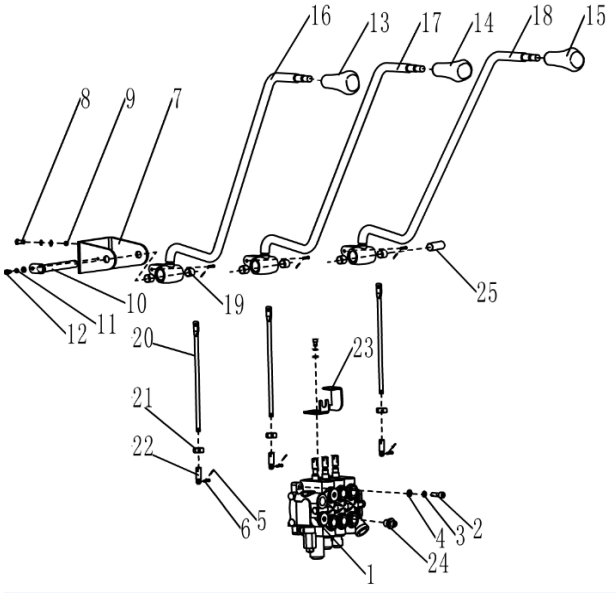

序号/NO	编码/SN	名称	Name	数量/QTY	备注/Remark
1	252025010011	多路阀(三联)	Multiple valve(triple)	1	
2	910100400006	螺栓GB5786-M10x1.25x40-8.8	Bolt GB5786-M10x1.25x40-8.8	4	
3	910400500007	弹簧垫圈GB93-10	Spring washer GB93-10	8	
4	910400100007	平垫圈GB97.1-10-200HV	Washer GB97.1-10-200HV	12	
5	941100800001	销轴B4.75x20-c1B	Pin B4.75x20-c1B	6	
6	910600600011	开口销GB91-2x12	Cotter pin GB91-2x12	6	
7	252124520002	支架(阀杆)	Support (stem)	1	
8	910100300037	螺栓GB5783-M10x30-8.8	Bolt GB5783 M10x30-8.8	4	
9	910300100007	螺母GB6170-M10-10	Nut GB6170-M10-10	4	
10	255024510009	带耳轴Φ16x168	With trunnion Φ16x168	1	
11	910400500005	弹簧垫圈GB93-6	Spring washer GB93-6	1	
12	910200200032	螺钉GB70.1-M6x10-8.8	Screw GB70.1 M6x10-8.8	1	
13	253524520010	手柄球(起升)	Handle ball(lift)	1	
14	253524520009	手柄球(倾斜)	Handle ball(tilt)	1	
15	253525020002	手柄球(属具1)	Handle ball(belonging to 1)	1	
16	256824510002	操纵杆焊合(起升)	Joystick welding(lifting)	1	
17	256824510003	操纵杆焊合(倾斜)	Joystick welding(tilt)	1	
18	256825010004	操纵杆焊合(属具1)	Joystick welding(tool1)	1	
19	940500100006	复合套Φ16xΦ18x15-SF-1	Composite setΦ16xΦ18x15-SF-1	6	
20	252124520003	连接杆	Connecting rod	3	
21	910300100006	螺母GB6170-M8-10	Nut GB6170 M8-10	3	
22	255025020003	接头	joint	3	
23	253524520014	支架(行程开关)	Bracket (travel switch)	3	
24	255023520033	接头(直)8-M20x1.5-M16x1.5-60°	Joint (straight) 8-M20x1.5-M16x1.5-60	2	
25	255024520028	轴套Φ29xΦ16x38	Shaft sleeve Φ16xΦ29x38	1	

255098501019 多路换向阀操纵(四联)MULTI-WAY REVERSING VALVE CONTROL(TOUR)

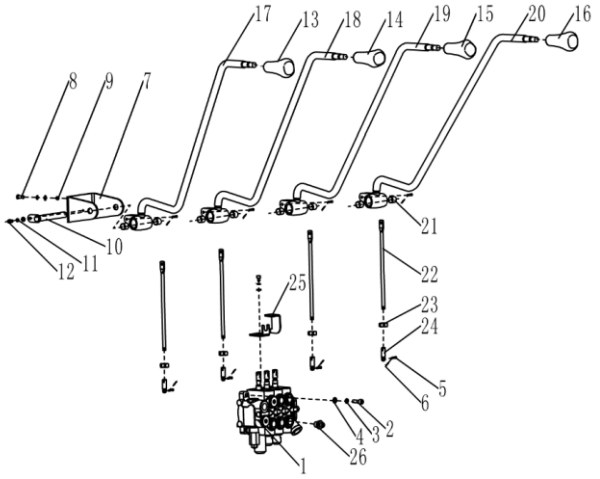

序号/NO	编码/SN	名称	Name	数量/QTY	备注/Remark
1	252025510011	多路阀(四联)	Multiway valve (quadruple)	1	
2	910100400006	螺栓GB5786-M10x1.25x40-8.8	Bolt GB5786-M10x1.25x40-8.8	4	
3	910400500007	弹簧垫圈GB93-10	Spring washer GB93-10	8	
4	910400100007	平垫圈GB97.1-10-200HV	Washer GB97.1-10-200HV	12	
5	941100800001	销轴B4.75x20-c1B	Pin B4.75x20-c1B	8	
6	910600600011	开口销GB91-2x12	Cotter pin GB91-2x12	8	
7	252124520002	支架(阀杆)	Support (stem)	1	
8	910100300037	螺栓GB5783-M10x30-8.8	Bolt GB5783 M10x30-8.8	4	
9	910300100007	螺母GB6170-M10-10	Nut GB6170-M10-10	4	
10	255024510009	带耳轴Φ16x168	With trunnion Φ16x168	1	
11	910400500005	弹簧垫圈GB93-6	Spring washer GB93-6	1	
12	910200200032	螺钉GB70.1-M6x10-8.8	Screw GB70.1 M6x10-8.8	1	
13	253524520010	手柄球(起升)	Handle ball (lift)	1	
14	253524520009	手柄球(倾斜)	Handle ball (tilt)	1	
15	253525020002	手柄球(属具1)	Handle ball (belonging to1)	1	
16	253525520002	手柄球(属具2)	Handball (belonging to 2)	1	
17	256824510002	操纵杆焊合(起升)	Joystick welding (lifting)	1	
18	256824510003	操纵杆焊合(倾斜)	Joystick welding (tilt)	1	
19	256825010004	操纵杆焊合(属具1)	Joystick welding (tool 1)	1	
20	252685510005	操纵杆焊合(属具2)	Joystick welding (kit 2)	1	
21	940500100006	复合套Φ16xΦ18x15-SF-1	Composite set Φ16xΦ18x15-SF-1	8	
22	252124520003	连接杆	Connecting rod	4	
23	910300100006	螺母GB6170-M8-10	Nut GB6170 M8-10	4	
24	255025020003	接头	joint	4	
25	253524520014	支架(行程开关)	Bracket (travel switch)	4	
26	255023520033	接头(直)8-M20x1.5-M16x1.5-60°	Joint (straight)8-M20x1.5-M16x1.5-60°	4	

255098501020 工作油箱装置及安装/WORK TANK INSTALLATION AND INSTALLATION

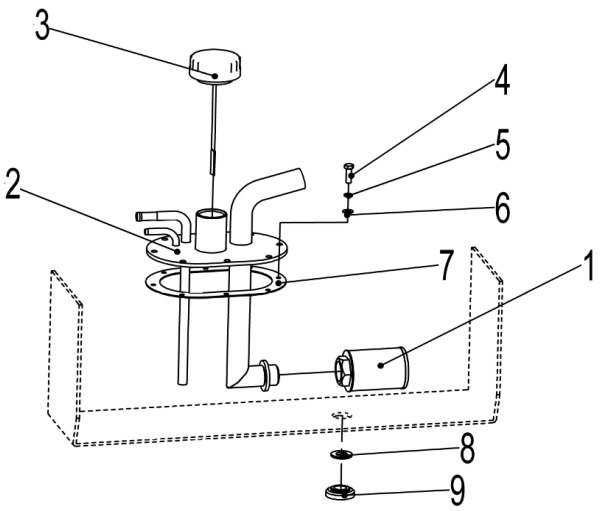

序号/NO	编码/SN	名称	Name	数量/QTY	备注/Remark
1	255019010004	网式过滤器	Mesh filter	1	
2	252119010002	油箱盖总成	Lid welded	1	
3	251119010003	油尺塞总成	Oil ruler plug assembly	1	
4	910100300022	螺栓GB5783-M8x20-8.8	Bolt GB5783 M8x20-8.8	8	
5	910400500006	弹簧垫圈GB93-8	Spring washer GB93-8	8	
6	910400100006	平垫圈GB97.1-8-200HV	Washer GB97.1-8-200HV	8	
7	255019020013	密封垫204x134x1.5-R	Gasket 204x134x1.5-R	1	
8	910800900001	组合垫圈JB982-20	Combination washer JB982-20	1	
9	255019020015	放油塞M20x1.5	Drain plug M20x1.5	1	

255098501021 车架装配/FRAME ASSEMBLY

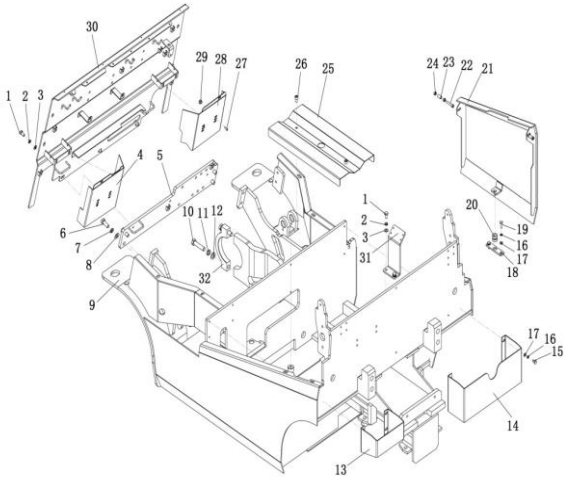

序号/NO	编码/SN	名称	Name	数量/QTY	备注/Remark
1	910100300035	螺栓GB5783-M10x20-8.8	Bolt GB5783 M10x20-8.8	5	
2	910400500007	弹簧垫圈GB93-10	Spring washer GB93-10	5	
3	910400100007	平垫圈GB97.1-10-200HV	Washer GB97.1-10-200HV	5	
4	252121511004	盖板焊合(左)	Welding of cover plate(left)	1	
5	252121511010	前连扳焊合	Butt welding	1	
6	910100300063	螺栓GB5783-M14x35-8.8	Bolt GB5783 M14x35-8.8	4	
7	910400500009	弹簧垫圈GB93-14	Spring washer GB93-14	4	
8	910400100009	平垫圈GB97.1-14-200HV	The flat washer GB97.1-14-200HV	4	
9	252121511001	车架焊合	Frame welded	1	
10	910100200016	螺栓GB5785-M16x1.5x70-8.8	Bolt GB5785-M16x1.5x70-8.8	4	
11	910400500010	弹簧垫圈GB93-16	Spring washer GB93-16	4	
12	910400100010	平垫圈GB97.1-16-200HV	The flat washer GB97.1-16-200HV	4	
13	252121521205	电瓶挡板左	Battery baffle left	1	
14	252121511012	电瓶挡板焊合右	The battery baffle is welded to the righ	1	
15	910100300020	螺栓GB5783-M8x16-8.8	Bolt GB5783 M8x16-8.8	8	
16	910400500006	弹簧垫圈GB93-8	Spring washer GB93-8	10	
17	910400100006	平垫圈GB97.1-8-200HV	The flat washer GB97.1-8-200HV	10	
18	252121521096	挡板	baffle	1	
19	910100300023	螺栓GB5783-M8x25-8.8	Bolt GB5783 M8x25-8.8	2	
20	213019020009	垫I	Mat I	1	
21	252121511005	外侧板焊合(电池)	Soldered outer plate(battery)	1	
22	910200200059	螺钉GB70.1-M8x30-8.8	Screw GB70.1 M8x30-8.8	2	
23	255012020012	聚氨酯管	Pu tube	2	
24	910300100006	螺母GB6170-M8-10	Nut GB6170 M8-10	4	
25	252121521101	盖板(线路)	Cover plate (circuit)	1	
26	910200200074	螺钉GB70.1-M10x16-8.8	Screw GB70.1 M10x16-8.8	2	
27	910200300018	螺钉GB70.2-M6x16-8.8	Screw GB70.2 M6x16-8.8	4	
28	252121511006	盖板焊合(右)	Welding of cover plate (right)	1	
29	940801500001	卡式螺母M6	Clip nut M6	4	
30	252121511009	仪表架焊合	The meter stand is welded together	1	
31	252121521102	安装板(接插件)	Installation board (connector)	1	

255098501021 车架装配/FRAME ASSEMBLY

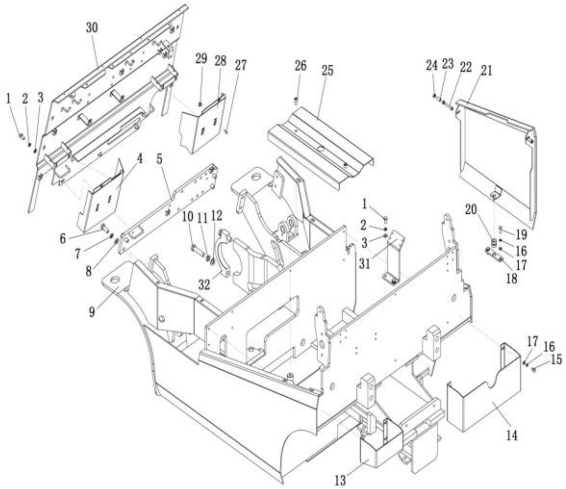

序号/NO	编码/SN	名称	Name	数量/QTY	备注/Remark
32	251021520001	盖	cover	2	

255098501022 护顶架装配/TOP GUARD ASSEMBLY

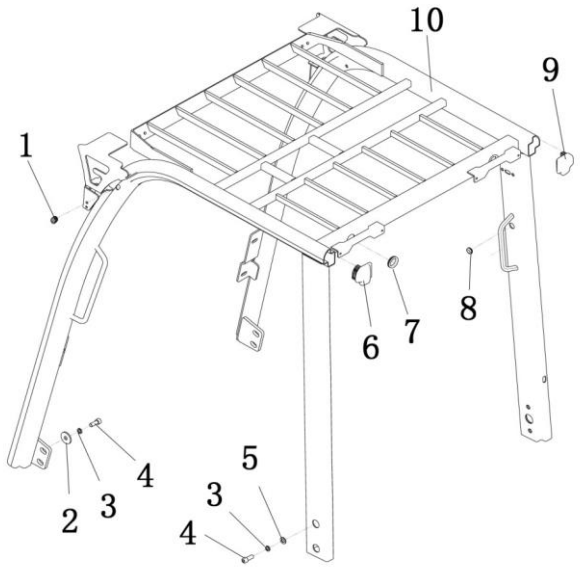

序号/NO	编码/SN	名称	Name	数量/QTY	备注/Remark
1	255022020003	大灯穿线圈	The headlamp goes through the coil	2	
2	910400200005	大垫圈GB96.1-12-200HV	Big washer GB96.1-12-200HV	4	
3	910400500008	弹簧垫圈GB93-12	Spring washer gb93-12	8	
4	910100300050	螺栓GB5783-M12x30-8.8	Bolt GB5783 M12x30-8.8	8	
5	910400100008	平垫圈GB97.1-12-200HV	The flat washer GB97.1-12-200 hv	4	
6	255022020001	防护罩一(异型管)	Protective cover 1 (special shaped tub	1	
7	255022020004	尾灯出线圈	Tail light out coil	2	
8	252022020050	充电插座线垫圈	Charging socket cable gasket	1	
9	255022020002	防护罩二(异型管)	Shield 2 (shaped tube)	1	
10	252122011001	护顶架焊合	The top guard is welded together	1	

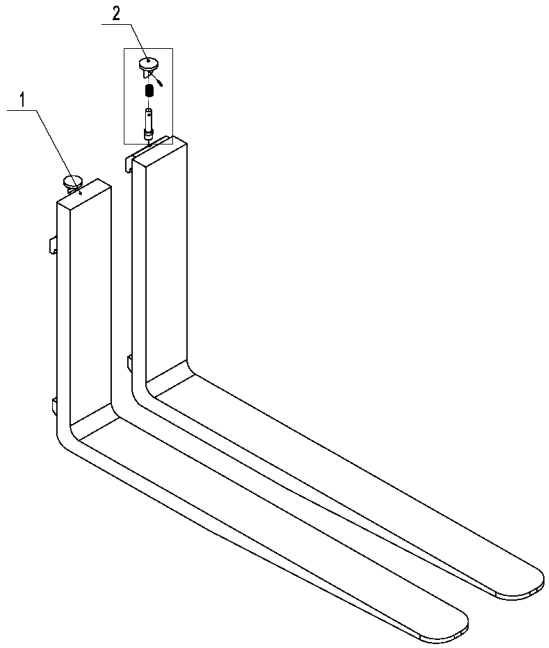

255098501023 货叉/FORK

序号/NO	编码/SN	名称	Name	数量/QTY	备注/Remark
A	940100100008	挂钩ⅡA型货叉120x40x1070	Peg 120x40x1070 II type A pallet fork	2	FE4P20Q
	940100100009	挂钩ⅡA型货叉120x40x1220	Peg 120x40x1220 II type A pallet fork	2	FE4P20Q
	940100100011	挂钩ⅡA型货叉120x40x1370	Peg 120x40x1370 II type A pallet fork	2	FE4P20Q
	940100100010	挂钩ⅡA型货叉120x40x1150	Peg 120x40x1150 II type A pallet fork	2	FE4P20Q
	940100100012	挂钩ⅡA型货叉120x40x1520	Peg 120x40x1520 type A pallet fork	2	FE4P20Q
	940100100030	挂钩ⅡA型货叉120x40x1820	Peg 120x40x1820 II type A pallet fork	2	FE4P20Q
	940100100001	挂钩ⅡA型货叉100x35x920	Peg 100x35x920 II type A pallet fork	2	FE4P16Q
	940100100002	挂钩ⅡA型货叉100x35x950	Peg 100x35x950 II type A pallet fork	2	FE4P16Q
	940100100003	挂钩ⅡA型货叉100x35x1070	Peg 100x35x1070 II type A pallet fork	2	FE4P16Q
	940100100004	挂钩ⅡA型货叉100x35x1150	Peg 100x35x1150 II type A pallet fork	2	FE4P16Q
	940100100005	挂钩ⅡA型货叉100x35x1220	Peg 100x35x1220 II type A pallet fork	2	FE4P16Q
	940100100006	挂钩ⅡA型货叉100x35x1375	Peg 100x35x1375 II type A pallet fork	2	FE4P16Q
	940100100029	挂钩ⅡA型货叉100x35x1520	Peg 100x35x1520 II type A pallet fork	2	FE4P16Q
	940100100091	挂钩ⅡA型货叉100x35x1070(A2全稍)	Peg 100x35x1070 II type A pallet fork(	2	FE4P16Q
1	▲	货叉体	The Fork body	2	
2	253098514101	插销组件	Lift pin assembly	2	

255098501024 倾斜油缸/TILT CYLINDER

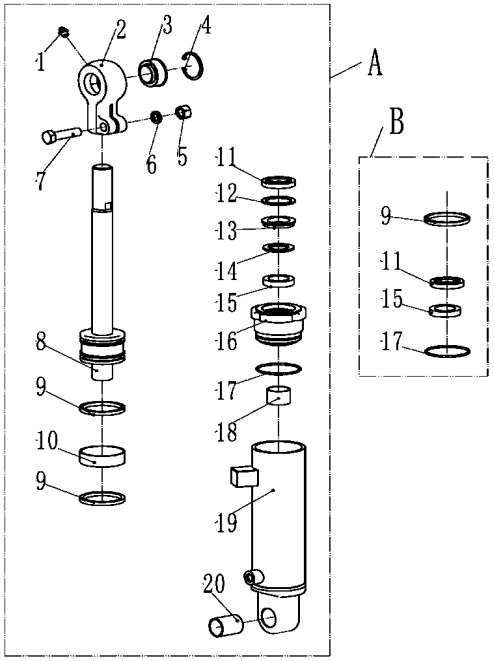

序号/NO	编码/SN	名称	Name	数量/QTY	备注/Remark
A	252120510001	油缸(TL)(TL)Φ70xΦ32x110(6/10)	Oil cylinder(TL)Φ70xΦ32x110(6/10)	1	H＜4000,Left
	252120510002	油缸(TL)Φ70xΦ32x69(6/6)	Oil cylinder(TL)Φ70xΦ32x69(6/6)	1	4000≤H≤5000,Left
	252120510003	油缸(TL)Φ70xΦ32x52(3/6)	Oil cylinder(TL)Φ70xΦ32x52(3/6)	1	H>5000Left
	252120510005	油缸(TR)Φ70xΦ32x110(6/10)	Oil cylinder(TR)Φ70xΦ32x110(6/10)	1	H＜4000,Right
	252120510006	油缸(TR)Φ70xΦ32x69(6/6)	Oil cylinder(TR)Φ70xΦ32x69(6/6)	1	4000≤H≤5000,Right
	252120510007	油缸(TR)Φ70xΦ32x52(3/6)	Oil cylinder(TR)Φ70xΦ32x52(3/6)	1	H>5000,Right
B	252198510006	密封件修理包(倾斜缸)	Seal kits (tlited cylinder)	2	
1	▲	直通式滑脂嘴Z1/8	Grease mouth Z1/8	2	
2	▲	耳环	Earring	2	
3	▲	关节轴承GE30ES	Bearing GE30ES	2	
4	▲	挡圈47	Circlip 47	2	
5	▲	螺母M14	Nut M14	2	
6	▲	垫圈14	Washer14	2	
7	▲	螺栓M14x55	Bolt M14x55	2	
8	▲	活塞体总成	Piston body assembly	2	
9	▲	Yx型密封圈	Yx seal ring	2	
10	▲	支承环D63x20x2.5	Support ring	2	
11	▲	防尘圈	Dust ring	2	
12	▲	挡圈52	Circlip 52	2	
13	▲	挡圈	Circlip	2	
14	▲	挡片48x30x3	Catch 48x30x3	2	
15	▲	U型密封圈	Useal ring 48x30x10	2	
16	▲	导向套	Guide sleeve	2	
17	▲	O型密封圈	O seal ring 63x3.1	2	
18	▲	钢背轴承3025	Bearing 3025	2	
19	▲	缸筒总成	Cylinder barrel assembly	2	
20	▲	钢背轴承3040	Bearing 3040	2	

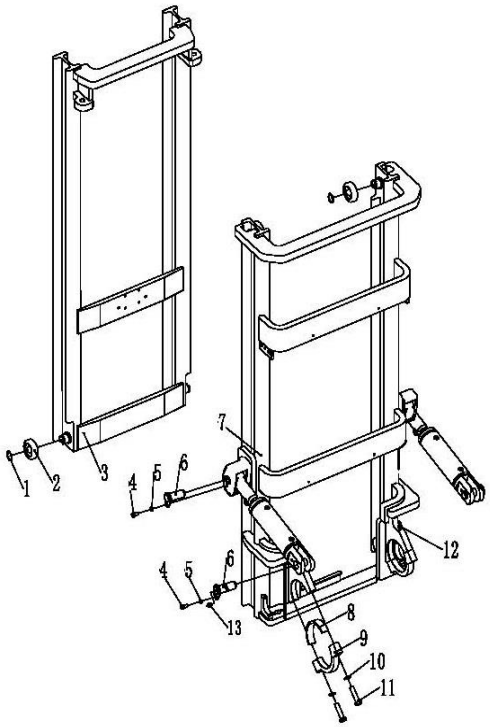

255098501025 门架(标准门架)/MAST(stand mast)

序号/NO	编码/SN	名称	Name	数量/QTY	备注/Remark
1	910401300018	轴用弹性挡圈GB894.1-35	Shaft with elastic baffle GB894.1-35	4	
2	940200300049	复合滚轮Φ78.80-range=52.5-56.5(外	Composite roller	4	
3	252144012001	内门架焊合(2500)	Inner mast(2500)	1	H=2500
	252144012002	内门架焊合(2700)	Inner mast(2700)	1	H=2700
	252144012003	内门架焊合(3000)	Inner mast(3000)	1	H=3000
	252144012004	内门架焊合(3300)	Inner mast(3300)	1	H=3300
	252144012005	内门架焊合(3500)	Inner mast(3500)	1	H=3500
	252144012006	内门架焊合(3700)	Inner mast(3700)	1	H=3700
	252144012007	内门架焊合(4000)	Inner mast(4000)	1	H=4000
	252144012008	内门架焊合(4300)	Inner mast(4300)	1	H=4300
	252144012009	内门架焊合(4500)	Inner mast(4500)	1	H=4500
	252144012010	内门架焊合(5000)	Inner mast(5000)	1	H=5000
4	910100300035	螺栓GB5783-M10x20-8.8	Bolt GB5783 M10x20-8.8	4	
5	910400500007	弹簧垫圈GB93-10	Spring washer GB93-10	4	
6	255044010057	带耳轴Φ30x82	With trunnion Φ30x82	4	
7	252144011001	外门架焊合(2500)	Outer mast(2500)	1	H=2500
	252144011002	外门架焊合(2700)	Outer mast(2700)	1	H=2700
	252144011003	外门架焊合(3000)	Outer mast(3000)	1	H=3000
	252144011004	外门架焊合(3300)	Outer mast(3300)	1	H=3300
	252144011005	外门架焊合(3500)	Outer mast(3500)	1	H=3500
	252144011006	外门架焊合(3700)	Outer mast(3700)	1	H=3700
	252144011007	外门架焊合(4000)	Outer mast(4000)	1	H=4000
	252144011008	外门架焊合(4300)	Outer mast(4300)	1	H=4300
	252144011009	外门架焊合(4500)	Outer mast(4500)	1	H=4500
	252144011010	外门架焊合(5000)	Outer mast(5000)	1	H=5000
8	254144020063	轴瓦	bush	2	
9	254144020067	轴承盖	Bearing cover	2	
10	910400500010	弹簧垫圈GB93-16	Spring washer GB93-16	4	
11	910100200016	螺栓GB5785-M16x1.5x70-8.8	Bolt GB5785-M16x1.5x70-8.8	4	
12	911200100004	油杯JB7940.1-M10x1	Oil cup JB7940.1-M10x1	2	

255098501026 货叉架(标准门架)/FORK ARM CARRIER(stand mast)

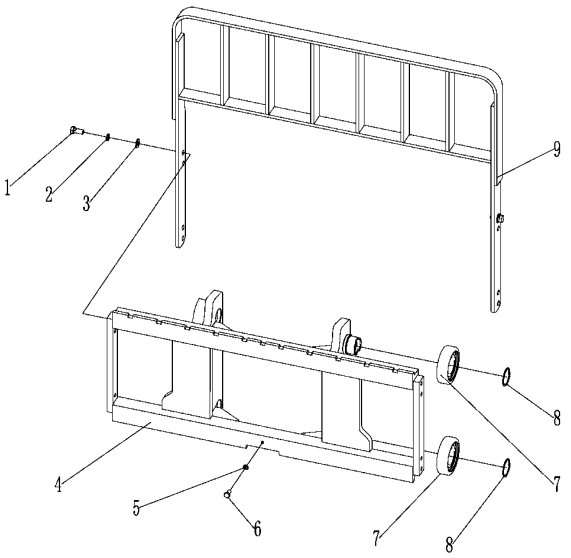

序号/NO	编码/SN	名称	Name	数量/QTY	备注/Remark
1	910100300062	螺栓GB5783-M14x30-8.8	Bolt GB5783 M14x30-8.8	8	
2	910400500009	弹簧垫圈GB93-14	Spring washer GB93-14	8	
3	910400100009	平垫圈GB97.1-14-200HV	Washer GB97.1-14-200HV	8	
4	252138010101	货叉架焊合A(二级标准门架)	Welding of cargo fork rack A(seconda	1	
4	252138011001	货叉架焊合B(二级标准门架)	Welding of cargo fork rack B(seconda	1	
5	910400500007	弹簧垫圈GB93-10	Spring washer GB93-10	1	
6	910200200077	螺钉GB70.1-M10x30-8.8	Screw GB70.1-M10x30-8.8	1	
7	940200300049	复合滚轮Φ78.80-range=52.5-56.5(外	Composite roller	6	
8	910401300018	轴用弹性挡圈GB894.1-35	Shaft with elastic baffle GB894.1-35	6	
9	255040510001	挡货架焊合(1040x986)	Welding of shelving rack (1040x986)	1	

255098501027 起升油缸（标准门架)/LIFTING CYLINDER（stand mast）

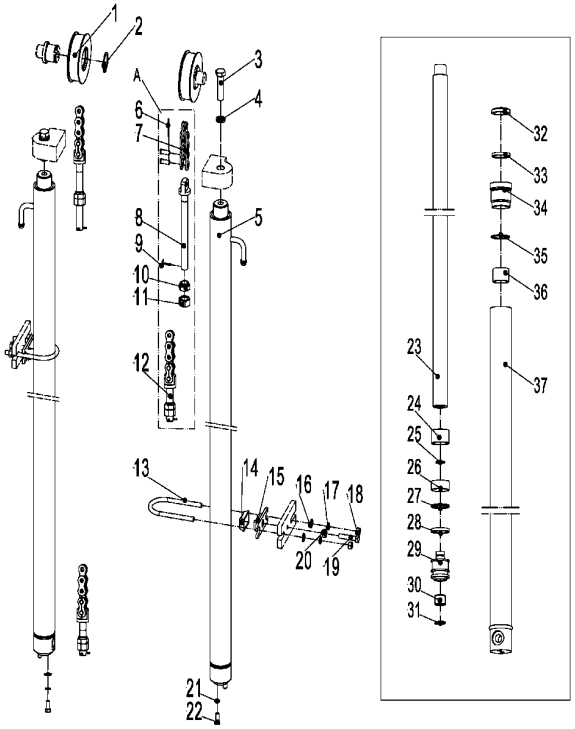

序号/NO	编码/SN	名称	Name	数量/QTY	备注/Remark
A	251244014002	起升链条LH1234-93	Lifting chain LH1234-93	2	H=2500
	252144014011	起升链条LH1234-99	Lifting chain LH1234-99	2	H=2700
	252144014012	起升链条LH1234-107	Lifting chain LH1234-107	2	H=3000
	251244514005	起升链条LH1234-115	Lifting chain LH1234-115	2	H=3300
	251244014006	起升链条LH1234-119	Lifting chain LH1234-119	2	H=3500
	251244514006	起升链条LH1234-125	Lifting chain LH1234-125	2	H=3700
	251244014008	起升链条LH1234-149	Lifting chain LH1234-149	2	H=4000
	252144014017	起升链条LH1234-151	Lifting chain LH1234-151	2	H=4300
	252144014009	起升链条LH1234-161	Lifting chain LH1234-161	2	H=4500
	252144014018	起升链条LH1234-177	Lifting chain LH1234-177	2	H=5000
B	254144010021	油缸(H=2500)	Cylinder(H=2500)	2	H=2500
	254144010022	油缸(H=2700)	Cylinder(H=2700)	2	H=2700
	254144010023	油缸(H=3000)	Cylinder(H=3000)	2	H=3000
	254144010024	油缸(H=3300)	Cylinder(H=3300)	2	H=3300
	254144010025	油缸(H=3500)	Cylinder(H=3500)	2	H=3500
	254144010026	油缸(H=3700)	Cylinder(H=3700)	2	H=3700
	254144010027	油缸(H=4000)	Cylinder(H=4000)	2	H=4000
	254144010028	油缸(H=4300)	Cylinder(H=4300)	2	H=4300
	254144010029	油缸(H=4500)	Cylinder(H=4500)	2	H=4500
	254144010030	油缸(H=5000)	Cylinder(H=5000)	2	H=5000
C	254198510001	密封件修理包(标准门架起升缸)	Seal kits(standard mast lifting cylinder	2	
1	940200500015	链轮轴承780708K3-Φ95xΦ40x27	Chain wheel bearing780708K3-Φ95xΦ	2	
2	910401300020	轴用弹性挡圈GB894.1-40	Circlip GB894.1-40	2	
3	910100300051	螺栓GB5783-M12x35-8.8	Bolt GB5783-M12x35-8.8	2	
4	910400500008	弹簧垫圈GB93-12	Washer GB93-12	2	
6	910600600015	开口销GB91-2x20	Split pin 2x20	2	
7	910900400010	板式链GB6074-LH1234	LH1234chain	2	
8	252044020121	链条螺栓M16x1.5x178	Joint	2	
9	910600600030	开口销GB91-3.2x30	Split pin 3.2x30	2	
10	910300200008	螺母GB6171-M16x1.5-10	Nut M16x1.5	2	
11	254144020066	球面螺母M16x1.5	Nut M16x1.5	2	

255098501027 起升油缸（标准门架)/LIFTING CYLINDER（stand mast）

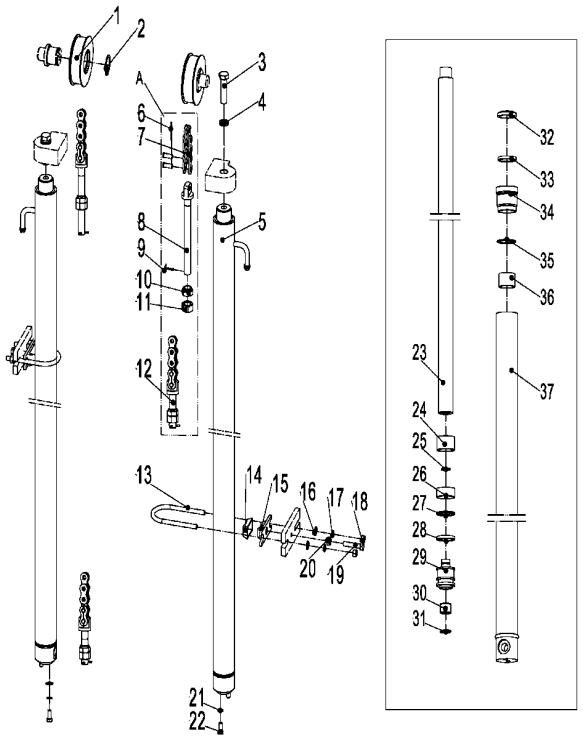

序号/NO	编码/SN	名称	Name	数量/QTY	备注/Remark
12	252044020120	链条螺栓M16x1.5x95	Joint	2	
13	254144020060	U形螺栓Φ57	Fixing ring	2	
14	254144020061	防护罩	shield	2	
15	254144020062	固定座	The fixed seat	2	
16	910400100006	平垫圈GB97.1-8-200HV	Washer GB97.1-8-200 hv	4	
17	910400500006	弹簧垫圈GB93-8	Spring washer GB93-8	4	
18	910300100006	螺母GB6170-M8-10	Nut GB6170 M8-10	4	
19	910100300038	螺栓GB5783-M10x35-8.8	Bolt GB5783 M10x35-8.8	2	
20	910300100007	螺母GB6170-M10-10	Nut GB6170-M10-10	2	
21	910400500007	弹簧垫圈GB93-10	Spring washer GB93-10	6	
22	910100400002	螺栓GB5786-M10x1.25x20-8.8	Bolt GB5786-M10x1.25 x20-8.8	2	
23	▲	活塞杆	The piston rod	1	
24	▲	调整套φ35.5xφ44xL1	Adjust the set of phi35. x44 xL1	1	
25	▲	钢丝挡圈	Steel wire ring	1	
26	▲	支承环D45x8(t=2.5)	Bearing ring D45x8 (t=2.5)	1	
27	▲	挡片35x45x3	35 x45x3 block slice	1	
28	▲	孔用密封圈45x35x6	Hole with sealing ring 45x35x6	1	
29	▲	活塞	The piston	1	
30	▲	铜套	Copper set of	1	
31	▲	钢丝挡圈	Steel wire ring	1	
32	▲	防尘圈35x47x7	35 x47x7 shield	1	
33	▲	轴用密封圈35x45x6	Shaft seal ring 35x45x6	1	
34	▲	导向套	Guide sleeve	1	
35	▲	O型密封圈44.7x2.4	O-ring 44.7x2.4	1	
36	▲	钢背轴承3530	Steel back bearing 3530	1	
37	▲	缸体	Cylinder block	1	

255098501028 门架起升管路（标准门架）/SINGLE ADDITIONAL TUBE(stand mast)

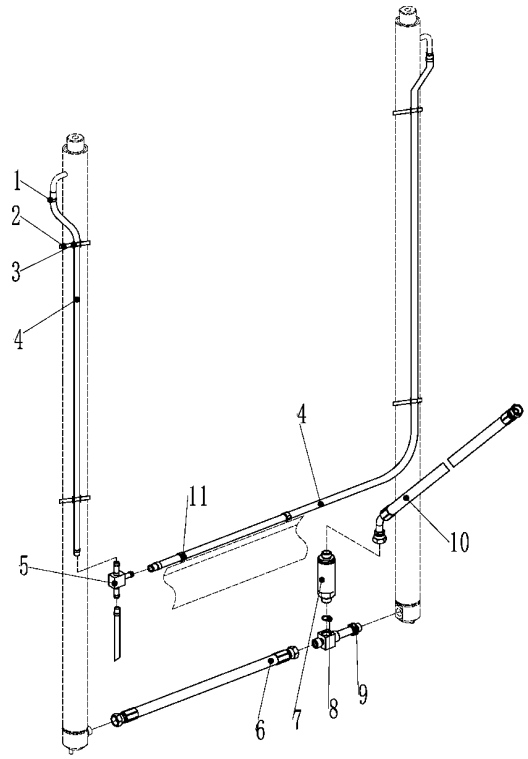

序号/NO	编码/SN	名称	Name	数量/QTY	备注/Remark
1	255044020043	卡箍13	Clamp 13	2	
2	921600400001	扎带4x250	tie 4x250	4	
3	255044020042	压板	clamp	4	
4	▲	PE软管Φ10xΦ13	PE hoseΦ10xΦ13	1.7	H=2500
	▲	PE软管Φ10xΦ13	PE hoseΦ10xΦ13	1.9	H=2700
	▲	PE软管Φ10xΦ13	PE hoseΦ10xΦ13	2.2	H=3000
	▲	PE软管Φ10xΦ13	PE hoseΦ10xΦ13	2.5	H=3300
	▲	PE软管Φ10xΦ13	PE hoseΦ10xΦ13	2.7	H=3500
	▲	PE软管Φ10xΦ13	PE hoseΦ10xΦ13	2.9	H=3700
	▲	PE软管Φ10xΦ13	PE hoseΦ10xΦ13	3.3	H=4000
	▲	PE软管Φ10xΦ13	PE hoseΦ10xΦ13	3.6	H=4300
	▲	PE软管Φ10xΦ13	PE hoseΦ10xΦ13	3.8	H=4500
	▲	PE软管Φ10xΦ13	PE hoseΦ10xΦ13	4.3	H=5000
5	255044020118	接头(三通)	Joint (tee)	1	
6	254144020039	液压管总成(直)12-L345-2SC-60°	Hydraulic tube assembly (straight) 12-	1	
7	950700300002	限速阀XSF-F16L-48	The speed limit valve XSF-F16L-48	1	
8	910800100040	O形圈-内17x2.65	O-ring-inner17x2.65	1	
9	255044010040	接头(三通)	Joint (tee)	1	
10	252144029001	液压管总成(135°)15-L850-2SC-60°	Hydraulic tubing assembly (135°)15-L8	1	
11	921600400003	扎带(带扣)P-N156-00646	Strap (buckle)P-N156-00646	4	

255098501029 单附加管路(标准门架)DOUBLE ADDITIONAL TUBE(stand mast)

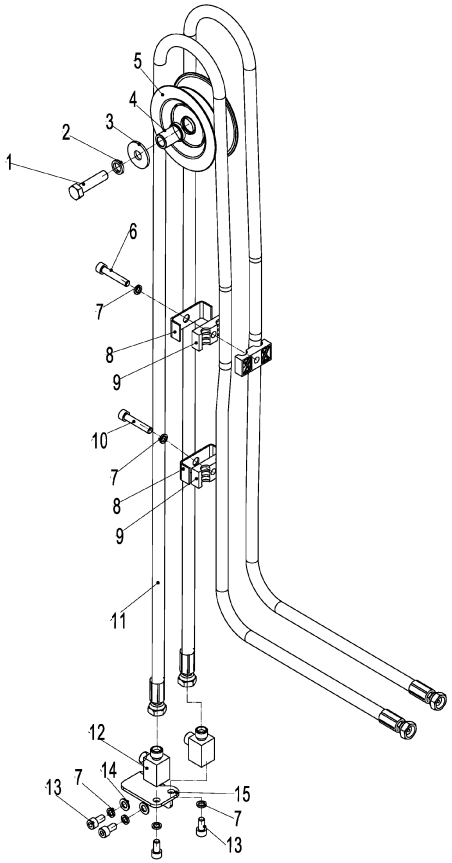

序号/NO	编码/SN	名称	Name	数量/QTY	备注/Remark
1	910100300052	螺栓GB5783-M12x40-8.8	Bolt GB5783 M12x40-8.8	1	
2	910400500008	弹簧垫圈GB93-12	Spring washer gb93-12	1	
3	910400200005	大垫圈GB96.1-12-200HV	Big washer GB96.1-12-200 hv	1	
4	255044520081	衬套(带肩)Φ20xΦ13x28	Bushings (shoulder)Φ20xΦ13x28	1	
5	251127520001	滑轮Φ110x42(双槽)	Pulley Φ110x42 (dual slot)	1	
6	910200200062	螺钉GB70.1-M8x45-8.8	Screw GB70.1 M8x45-8.8	1	
7	910400500006	弹簧垫圈GB93-8	Spring washer GB93-8	6	
8	255028520035	安装板(管夹)	Installation plate (pipe clamp)	2	
9	255028520034	胶管固定块	Fixed block of hose	3	
10	910200200060	螺钉GB70.1-M8x35-8.8	Screw GB70.1 M8x35-8.8	1	
11	255030520006	液压管总成(直)10-L3370-1SC-60°	Hydraulic pipe assembly (straight)10-L	2	H=2500
	254128520040	液压管总成(直)10-L3500-1SC-60°	Hydraulic pipe assembly (straight)10-L	2	H=2700
	281227511001	液压管总成(直)10-L3800-1SC-60°	Hydraulic pipe assembly (straight)10-L	2	H=3000
	281227511002	液压管总成(直)10-L4200-1SC-60°	Hydraulic pipe assembly (straight)10-L	2	H=3300
	281227511003	液压管总成(直)10-L4300-1SC-60°	Hydraulic pipe assembly (straight)10-L	2	H=3500
	281227511004	液压管总成(直)10-L4500-1SC-60°	Hydraulic pipe assembly (straight)10-L	2	H=3700
	281227511005	液压管总成(直)10-L4900-1SC-60°	Hydraulic tube assembly (straight)10-L	2	H=4000
	281227511006	液压管总成(直)10-L5200-1SC-60°	Hydraulic pipe assembly (straight)10-L	2	H=4300
	281227511007	液压管总成(直)10-L5500-1SC-60°	Hydraulic pipe assembly (straight)10-L	2	H=4500
	281227511008	液压管总成(直)10-L5950-1SC-60°	Hydraulic tube assembly (straight)10-L	2	H=5000
12	255029020024	接头(锁定弯)8-2xM16x1.5-60°	Connector(lock bend)8-2xM16x1.5-60	2	
13	910200200055	螺钉GB70.1-M8x16-8.8	Screw GB70.1 M8x16-8.8	4	
14	910400100006	平垫圈GB97.1-8-200HV	Washer GB97.1-8-200HV	2	
15	251127520010	支架（右）	Bracket(right)	1	

255098501030 双附加管路(标准门架)

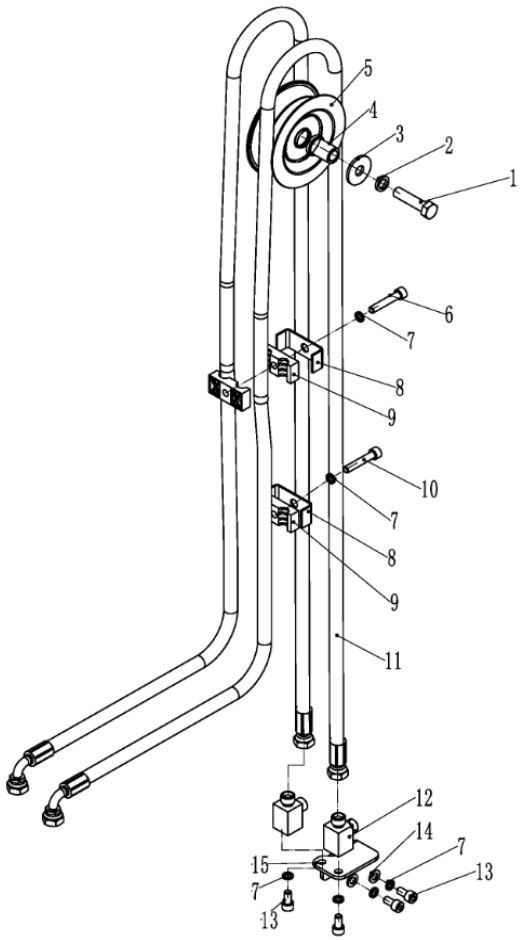

序号/NO	编码/SN	名称		数量/QTY	备注/Remark
1	910100300052	螺栓 GB5783-M12x40-8.8	Bolt GB5783 M12x40-8.8	1	
2	910400500008	弹簧垫圈 GB93-12	Spring washer GB93-12	1	
3	910400200005	平垫圈 GB97.1-12-200HV	The flat washer GB97.1-12-200HV	1	
4	255044520081	衬套 Φ22xΦ13x28	Bushing Φ22xΦ13x28	1	
5	251127520001	滑轮 Φ 110 x41 (双槽)	Pulley Φ110x41(double groove)	1	
6	910200200062	螺钉 GB70.1-M8x45-8.8	Screw GB70.1 M8x45-8.8	2	
7	910400500006	弹簧垫圈 GB93-8	Spring washer GB93-8	6	
8	255028520035	管夹	Pipe clamp	2	
9	255028520034	管夹	Pipe clamp	3	
10	910200200060	螺钉 GB70.1-M8x35-8.8	Screw GB70.1 M8x35-8.8	1	
11	255028520059	液压管总成(直)10-L3600-1SC-60°	HydrauLic tube assembLy10-L3600-1S	2	H=2500
	281228011001	液压管总成(直)10-L3700-1SC-60°	HydrauLic tube assembLy10-L3700-1S	2	H=2700
	263030520003	液压管总成(直)10-L4000-1SC-60°	HydrauLic tube assembLy10-L4000-1S	2	H=3000
	255028520062	液压管总成(直)10-L4400-1SC-60°	HydrauLic tubing assembLy10-L4400-	2	H=3300
	281227511004	液压管总成(直)10-L4500-1SC-60°	HydrauLic tube assembLy10-L4500-1S	2	H=3500
	275227511002	液压管总成(直)10-L4700-1SC-60°	HydrauLic tubing assembLy10-L4700-	2	H=3700
	255028520064	液压管总成(直)10-L5075-1SC-60°	HydrauLic tube assembLy10-L5075-1S	2	H=4000
	281228011003	液压管总成(直)10-L5400-1SC-60°	HydrauLic tubing assembLy10-L5400-	2	H=4300
	281228011004	液压管总成(直)10-L5700-1SC-60°	HydrauLic tubing assembLy10-L5700-	2	H=4500
	281228011005	液压管总成(直)10-L6150-1SC-60°	HydrauLic tubing assembLy 10-L6150	2	H=5000
12	255029020024	接头(锁定弯)8-2xM16x1.5-60°	Connector(lock bend)8-2xM16x1.5-60	2	
13	910200200055	螺钉GB70.1-M8x16-8.8	Screw GB70.1 M8x16-8.8	4	
14	910400100006	平垫圈GB97.1-8-200HV	Washer GB97.1-8-200HV	2	
15	251128020010	支架（左）	Bracket(left)	1	

255098501031 门架(两级全自由)/MAST(two stage full free)

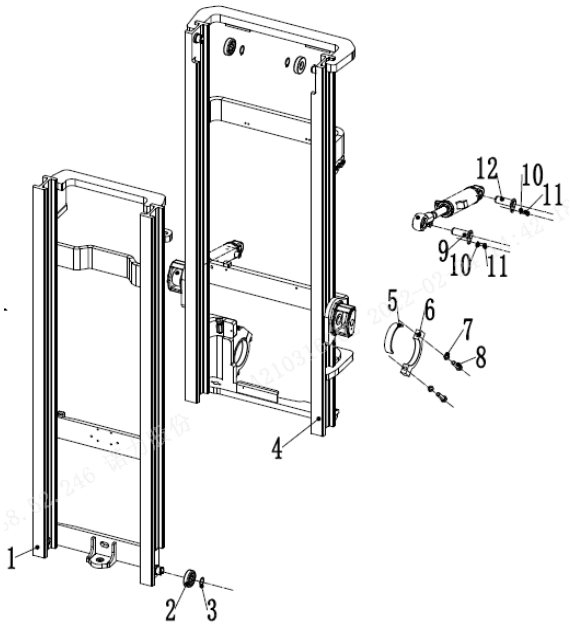

序号/NO	编码/SN	名称		数量/QTY	备注/Remark
1	252143512001	内门架焊合 2500	Inner mast(2500)	1	
	252143512002	内门架焊合 2700	Inner mast 2700	1	
	252143512003	内门架焊合 3000	Inner mast 3000	1	
	252143512004	内门架焊合 3300	Inner mast 3300	1	
	252143512005	内门架焊合 3500	Inner mast 3500	1	
	252143512006	内门架焊合 3700	Inner mast 3700	1	
	252143512007	内门架焊合 4000	Inner mast 4000	1	
2	940200300048	复合滚轮Φ79.10-range=45.3-49.3(外	RollerΦ79.10-range=45.3-49.3	4	
2	940200300047	复合滚轮Φ78.80-range=45.3-49.3(外	RolleΦ78.80-range=45.3-49.3	4	
3	910401300018	轴用弹性挡圈GB894.1-35	Elastic retaining ring for shaftGB894.1	4	
4	252143511001	外门架焊合 2500	Outer mast 2500	1	
	252143511002	外门架焊合 2700	Outer mast 2700	1	
	252143511003	外门架焊合 3000	Outer mast 3000	1	
	252143511004	外门架焊合 3300	Outer mast 3300	1	
	252143511005	外门架焊合 3500	Outer mast 3500	1	
	252143511006	外门架焊合 3700	Outer mast 3700	1	
	252143511007	外门架焊合 4000	Outer mast 4000	1	
5	254144020063	轴瓦	Bearing bush	2	
6	254144020067	盖	Bearing cover	2	
7	910400500010	弹簧垫圈GB93-16	Washer GB93-16	7	
8	910100200016	螺栓GB5785-M16x1.5x70-8.8	Bolt GB5785-M16x1.5x70-8.8	4	
9	255044010057	带耳轴Φ30x82	Axle Φ30x82	2	
10	910400500007	弹簧垫圈GB93-10	Washer GB93-10	8	
11	910100300035	螺栓GB5783-M10x20-8.8	Bolt GB5783-M10x20-8.8	4	
12	251144010001	带耳轴Φ30x82	Axle Φ30x82	2	

255098501032 货叉架(两级全自由)/FORK ARM CARRIER(two stage full free)

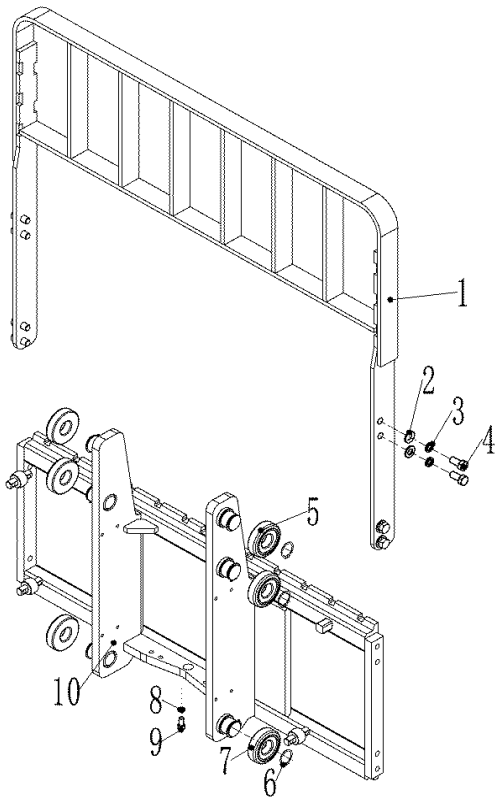

序号/NO	编码/SN	名称	Name	数量/QTY	备注/Remark
1	255040510001	Fork carrier welding 1040X986	挡货架焊合(1040x986)	8	
2	910100300062	Bolt GB5783-M14x30-8.8	螺栓GB5783-M14x30-8.8	8	
3	910400500009	Washer GB93-14	弹簧垫圈GB93-14	8	
4	910400100009	Washer GB97.1-14-200HV	平垫圈GB97.1-14-200HV	8	
5	940200100043	Fork carrier welding	主滚轮Φ78.80-range=52.5-56.5(外圈	2	选配
	940200100044	Washer GB93-10	主滚轮Φ79.10-range=52.5-56.5(外圈	2	选配
	940200100039	Screw GB70.1-M10x30-8.8	主滚轮Φ79.40-range=52.5-56.5(外圈	2	选配
6	910401300017	Circlip GB894.1-32	轴用弹性挡圈GB894.1-32	6	
7	940200300049	Parameter of compound roller 78.8-rau	复合滚轮Φ78.80-range=52.5-56.5(外	4	选配
	940200300050	Parameter of compound roller 79.1-rau	复合滚轮Φ79.10-range=52.5-56.5(外	4	选配
	940200300032	Parameter of compound roller 79.4-rau	复合滚轮Φ79.40-range=52.5-56.5(外	4	选配
8	910200200077	ScrewGB70.1-M10x30-8.8	螺钉GB70.1-M10x30-8.8	1	
9	910400100007	Washer GB97.1-14-200HV	平垫圈GB97.1-10-200HV	1	
10	254138010211	Fork carrier welding（two stage full fre	货叉架焊合(两级全自由门架)	1	

255098501033 短起升油缸（两级全自由门架）/LIFTING PIPE（two stage full free）

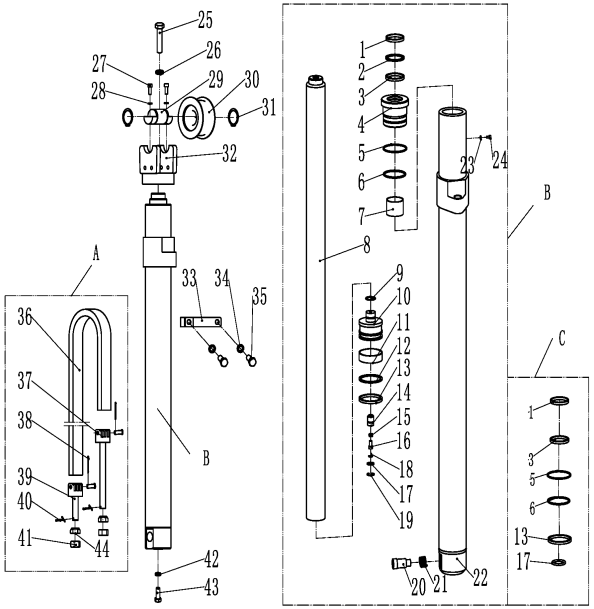

序号/NO	编码/SN	名称	Name	数量/QTY	备注/Remark
A	254143510060	起升链条LH1266-65	Lifting chain LH1266-65	2	H=2500
	254143515001	起升链条LH1266-67	Lifting chain LH1266-67	2	H=2700
	254143510061	起升链条LH1266-71	Lifting chain LH1266-71	2	H=3000
	254144510016	起升链条LH1266-75	Lifting chain LH1266-75	2	H=3300
	254144510017	起升链条LH1266-77	Lifting chain LH1266-77	2	H=3500
	254144540004	起升链条LH1266-81	Lifting chain LH1266-81	2	H=3700
	252143510071	起升链条LH1266-85	Lifting chain LH1266-85	2	H=4000
B	254143510100	油缸(M)(H=2500)	cylinder (M)(H=2500)	1	H=2500
	254143510101	油缸(M)(H=2700)	cylinder (M)(H=2700)	1	H=2700
	254143510102	油缸(M)(H=3000)	cylinder (M)(H=3000)	1	H=3000
	254143510103	油缸(M)(H=3300)	cylinder (M)(H=3300)	1	H=3300
	254143510104	油缸(M)(H=3500)	cylinder (M)(H=3500)	1	H=3500
	254143510105	油缸(M)(H=3700)	cylinder (M)(H=3700)	1	H=3700
	254143510106	油缸(M)(H=4000)	cylinder (M)(H=4000)	1	H=4000
C	254198510004	密封件修理包(二级全自由中缸)	Seal kits (two stage full free middle cy	1	
1	▲	防尘圈	Dust ring	1	
2	▲	挡片50x60x3	Catch 50x60x3	1	
3	▲	轴用密封圈	Seal ring	1	
4	▲	导向套	Guide sleeve	1	
5	▲	O型密封圈D75	O ring D75	1	
6	▲	O型密封圈D70	O ring D70	1	
7	▲	钢背轴承5035	Bearing 5035	1	
8	▲	活塞杆	Piston rod	1	
9	▲	钢丝挡圈	Circlip	1	
10	▲	活塞总成	Piston assembly	1	
11	▲	支承环70x20x3	Back up ring 70x20x3	1	
12	▲	挡圈70x60x3	Circlip 70x60x3	1	
13	▲	密封圈	Seal ring	1	
14	▲	阀套	Valve bushing	1	
15	▲	弹簧	Spring	1	
16	▲	阀芯	Valve plug	1	

255098501033 短起升油缸（两级全自由门架）/LIFTING PIPE（two stage full free）

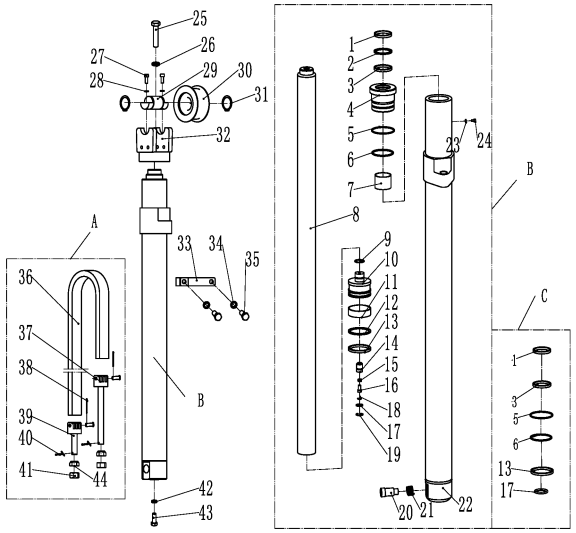

序号/NO	编码/SN	名称	Name	数量/QTY	备注/Remark
17	▲	O型密封圈	O ring	1	
18	▲	挡圈φ12	Circlip φ12	1	
19	▲	挡圈φ22	Circlip φ22	1	
20	▲	滑阀	Slide valve	1	
21	▲	弹簧	Spring	1	
22	▲	缸体	Cylinder	1	
23	▲	垫片	Spacer	1	
24	▲	螺钉M5x5	Screw M5x5	1	
25	910100300069	螺栓GB5783-M16x35-8.8	Bolt GB5783-M16x35-8.8	1	
26	910400500010	弹簧垫圈GB93-16	Washer GB93-16	1	
27	910200200057	螺钉GB70.1-M8x20-8.8	ScrewGB70.1- M8x20-8.8	2	
28	910400500006	弹簧垫圈GB93-8	Washer GB93-8	4	
29	254143520056	链轮轴	Chain wheel bearing	1	
30	940200500009	链轮轴承785208-00-φ95xφ40xφ47	Chain wheel bearing 785208-00-φ95x	1	
31	910401300020	轴用弹性挡圈GB894.1-40	Circlip GB894.1-40	2	
32	254143510050	链轮座焊合	Chain wheel weld	1	
33	254143520072	抱箍	Embrace hoop	1	
34	910400100006	平垫圈GB97.1-8-200HV	Washer GB97.1-8-200HV	2	
35	910100300022	螺栓GB5783-M8x20-8.8	Bolt GB5783-M8x20-8.8	2	
36	910900400013	LH1266板式链	LH1266 chain	1	H=2500
37	254143520070	链条螺栓M18x1.5x185.5	Joint	1	H=2700
38	910600600032	开口销GB91-3.2x40	Split pin GB91-3.2x40	1	H=3000
39	254143520071	链条螺栓M18x1.5x90.5	Joint	1	H=3300
40	910600600011	开口销GB91-2x12	Split pin-2x12	2	H=3500
41	255044020158	球面螺母M18x1.5	Nut M18x1.5	2	H=3700
42	910400500008	弹簧垫圈GB93-12	Washer GB93-12	1	H=4000
43	910100400009	螺栓GB5786-M12x1.25x25-8.8	Bolt GB5786-M12x1.25x25-8.8	1	

255098501034 起升油缸（两级全自由门架）/LIFTING PIPE（two stage full free）

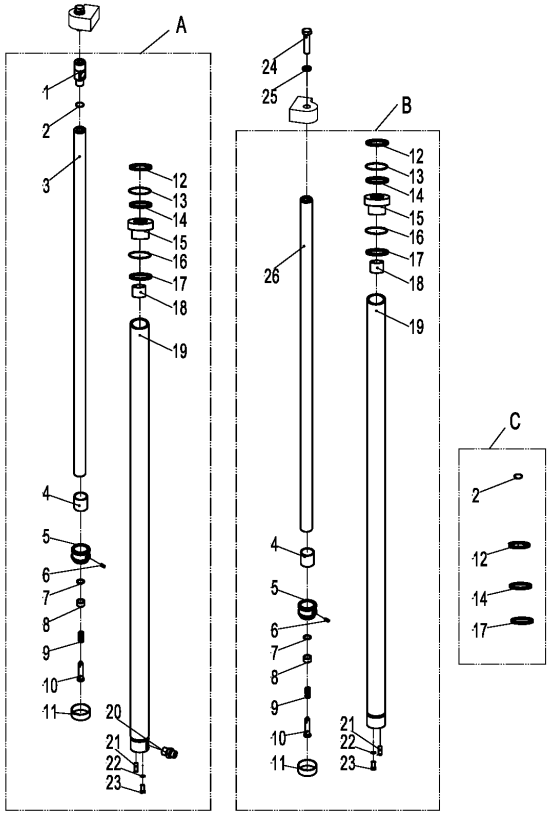

序号/NO	编码/SN	名称	Name	数量/QTY	备注/Remark
A	254143510120	油缸(R)(H=2500)	cylinder(R)Φ45xΦ32x1225	1	H=2500
	254143510121	油缸(R)(H=2700)	cylinder(R)Φ45xΦ32x1325	1	H=2700
	254143510130	油缸(R)(H=2900)	cylinder(R)Φ45xΦ32x1425	1	H=2900
	254143510122	油缸(R)(H=3000)	cylinder(R)Φ45xΦ32x1475	1	H=3000
	254143510123	油缸(R)(H=3300)	cylinder(R)Φ45xΦ32x1625	1	H=3300
	254143510125	油缸(R)(H=3500)	cylinder(R)Φ45xΦ32x1825	1	H=3500
	254143510126	油缸(R)(H=4000)	cylinder(R)Φ45xΦ32x1975	1	H=4000
B	254143510110	油缸(L)(H=2500)	cylinder(L)Φ45xΦ32x1225	1	H=2500
	254143510111	油缸(L)(H=2700)	cylinder(L)Φ45xΦ32x1325	1	H=2700
	254143510132	油缸(L)(H=2900)	cylinder(L)Φ45xΦ32x1425	1	H=2900
	254143510112	油缸(L)(H=3000)	cylinder(L)Φ45xΦ32x1475	1	H=3000
	254143510113	油缸(L)(H=3300)	cylinder(L)Φ45xΦ32x1625	1	H=3300
	254143510115	油缸(L)(H=3500)	cylinder(L)Φ45xΦ32x1825	1	H=3500
	254143510116	油缸(L)(H=4000)	cylinder(L)Φ45xΦ32x1975	1	H=4000
C	254198510002	密封件修理包(二级全自由起升缸)	Seal kits (two stage full free lifting cylir	2	
1	▲	左连接杆	Connecting rod	1	
2	▲	O型密封圈	O ring 26x2.4	1	
3	▲	左柱塞杆总成	Piston rod assembly	1	
4	▲	调整套	Adjusting bushing	2	
5	▲	缓冲活塞	Piston	2	
6	▲	内六角凹端紧固螺钉M4x6	ScrewM4x6	2	
7	▲	钢丝挡圈Φ18	Circlip Φ18	2	
8	▲	铜套	Copper bushing	2	
9	▲	弹簧	Spring	2	
10	▲	缓冲柱塞	Buffer plunger	2	
11	▲	支承环45x15x2.5	Supporting ring45x15x2.5	2	
12	▲	LBH防尘圈	LBH Dust ring 32x40x5/6.5	2	
13	▲	挡片32x42x3	Catch 32x42x3	2	
14	▲	轴用密封圈	Seal ring 40x50x6	2	
15	▲	导向套	Guide bushing	2	
16	▲	挡片45x50x1.5	Catch 45x50x1.5	2	

255098501034 起升油缸（两级全自由门架）/LIFTING PIPE（two stage full free）

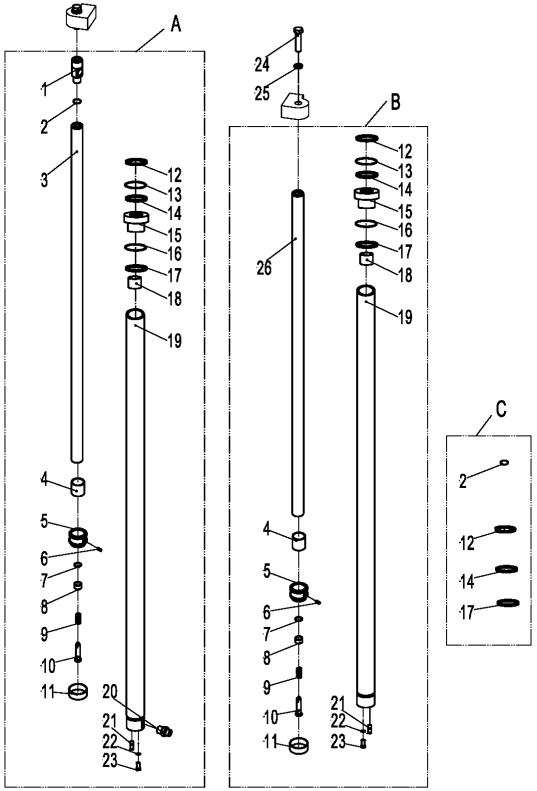

序号/NO	编码/SN	名称	Name	数量/QTY	备注/Remark
17	▲	O型密封圈	O ring 50x3.1	2	
18	▲	钢背轴承3230	Bearing3230	2	
19	▲	缸体	Cylinder	2	
20	281298520001	防爆阀PF3/8-M18x1.5	Anti-explosion valve PF3/8-M18x1.5	1	
21	▲	圆柱销10x26	Dowel pin10x26	2	
22	910400500008	弹簧垫圈GB93-12	Washer GB93-12	2	
23	910100400009	螺栓GB5786-M12x1.25x25-8.8	Bolt GB5786-M12x1.25x25-8.8	2	
24	910100400029	螺栓GB5786-M16x1.5x40-8.8	Bolt GB5786-M16x1.5x40-8.8	1	
25	910400500010	弹簧垫圈GB93-16	Washer GB93-16	1	
26	▲	右柱塞杆总成	Plunger rod assembly	1	

255098501035 门架起升管路（两级全自由门架）/SINGLE ADDITIONAL TUBE(two stage full free)

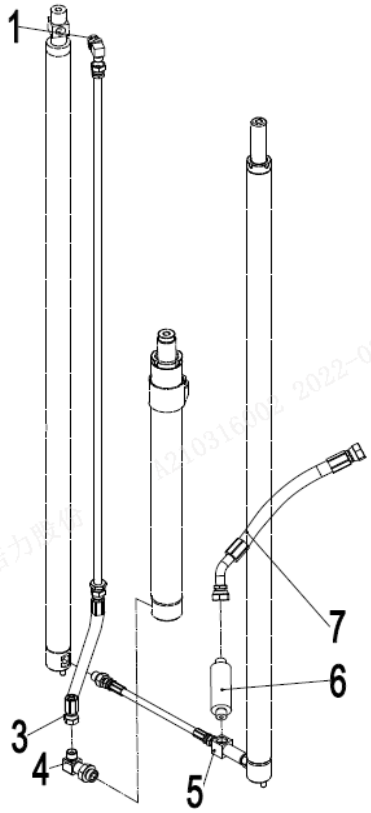

序号/NO	编码/SN	名称	Name	数量/QTY	备注/Remark
1	255044020151	接头(锁定弯)12-2xM22x1.5-60°	Joint 12-2xM22x1.5-60°	1	
2	255043520010	液压钢管焊合L=1010	Rise steel pipe L=1010	1	H=2500
	255043520024	液压钢管焊合L=1255	Rise steel pipe L=1255	1	H=2700/3000
	255043520011	液压钢管焊合L=1300	Rise steel pipe L=1300	1	H=3300
	255043520012	液压钢管焊合L=1460	Hydraulic pipe L=1460	1	H=3500/3700/4000
3	263044020037	液压管总成(直)15-L425-2SC-60°	Hydraulic hose assembly15-L425-2SC	1	H=2500/3500
	275244019003	液压管总成(直)15-L345-2SC-60°	Hydraulic hose assembly 15-L345-2SC	1	H=2700
	254143529501	液压管总成(直)15-L480-2SC-60°	Hydraulic hose assembly 15-L480-2SC	1	H=3000/3300
	254143529502	液压管总成(直)15-L510-2SC-60°	Hydraulic hose assembly 15-L510-2SC	1	H=3700
	254143529503	液压管总成(直)15-L560-2SC-60°	Hydraulic hose assembly 15-L560-2SC	1	H=4000
4	255043520022	接头(锁定弯)2-M27x2-M22x1.5	Joint 2-M27x2-M22x1.5	1	
5	254144020038	接头(三通)	Joint	1	
6	950700300001	限速阀XSF-F16L-40	Speed limit valve XSF-F16L-40	1	
7	252144029001	液压管总成(135°)15-L850-2SC-60°	Hydraulic hose assembly (135°)15-L85	1	

255098501036 侧移器及管路安装（二级全自由）/Side shifter and pipeline installation(two stage full free)

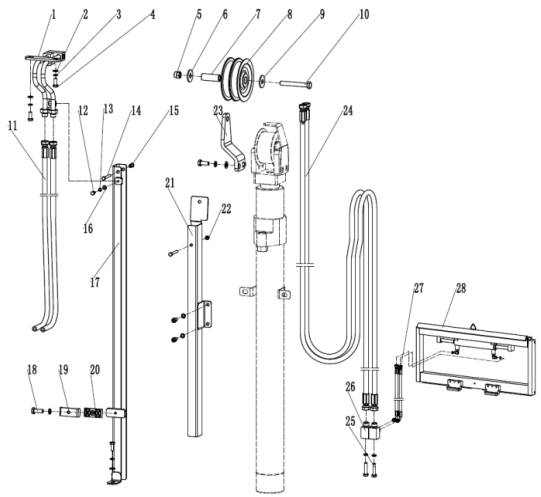

序号/NO	编码/SN	名称	Name	数量/QTY	备注/Remark
1	254128510001	过度钢管焊合	Transition steel pipe	1	
2	910400100006	平垫圈GB97.1-8-200HV	Washer GB97.1-8-200HV	2	
3	910400500006	弹簧垫圈GB93-8	Spring washer GB93-8	2	
4	941100400001	螺钉M8x20-8.8	Screw M8x20-8.8	2	
5	910300500006	螺母GB889.1-M12-10	Nut GB889.1-M12-10	1	
6	910400100008	平垫圈GB97.1-12-200HV	washer GB97.1-12-200HV	1	
7	255030520022	衬套	Bushing	1	
8	255030520021	滑轮φ110x27（单槽）	Pulley φ110x27	1	
9	910400200005	大垫圈GB96.1-12-200HV	Washer GB96.1-12-200HV	1	
10	910100100058	螺栓GB5782-M12x100-8.8	BoltGB5782-M12x100-8.8	1	
11	255030520024	液压管总成(直)10-L1720-1SC-60°	Hydraulic hose assembly 10-L1720-1S	2	H=2500
	255023520036	液压管总成(直)10-L1800-1SC-60°	Hydraulic hose assembly 10-L1800-1S	2	H=2700
	255028520048	液压管总成(直)10-L1950-1SC-60°	Hydraulic hose assembly 10-L1950-1S	2	H=3000
	254130520007	液压管总成(直)10-L2140-1SC-60°	Hydraulic hose assembly 10-L2140-1S	2	H=3300
	252030520016	液压管总成(直)10-L2220-1SC-60°	Hydraulic hose assembly 10-L2220-1S	2	H=3500
	255031020009	液压管总成(直)10-L2340-1SC-60°	Hydraulic hose assembly 10-L2340-1S	2	H=3700
	255031020100	液压管总成(直)10-L2530-1SC-60°	Hydraulic hose assembly 10-L2530-1S	2	H=4000
12	941100100009	螺钉M6x12-8.8	Nut M6x12-8.8	1	
13	910400500005	弹簧垫圈GB93-6	Spring washer GB93-6	1	
14	910100300016	螺栓GB5783-M6x50-8.8	BoltGB5783-M6x50-8.8	2	
15	910301300002	螺母GB17880.1-M6x16.5	Nut GB17880.1-M6x16.5	1	
16	910400100005	平垫圈GB97.1-6-200HV	Washer GB97.1-6-200HV	1	
17	252128510701	外导槽焊合L=875	Groove welding L=875	1	H=2500
	252128510702	外导槽焊合L=975	Groove welding L=975	1	H=2700
	252128510703	外导槽焊合L=1125	Groove welding L=1125	1	H=3000
	252128510704	外导槽焊合L=1275	Groove welding L=1275	1	H=3300
	252128510705	外导槽焊合L=1375	Groove welding L=1375	1	H=3500
	252128510706	外导槽焊合L=1475	Groove welding L=1475	1	H=3700
	252128510707	外导槽焊合L=1675	Groove welding L=1675	1	H=4000
18	910200200059	螺钉GB70.1-M8x30-8.8	Screw GB70.1-M8x30-8.8	1	
19	255028520035	管夹安装板	Pipe clamp munting plate	2	

255098501036 侧移器及管路安装（二级全自由）/Side shifter and pipeline installation(two stage full free)

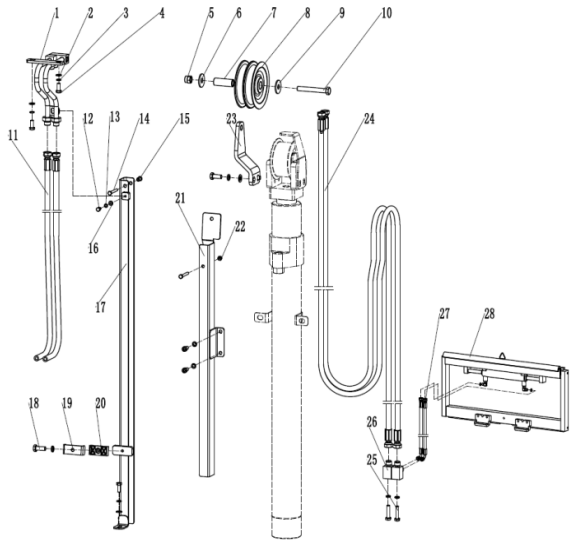

序号/NO	编码/SN	名称	Name	数量/QTY	备注/Remark
20	255028520034	胶管固定块	hose immobilization lump	2	H=2500
21	254128510002	内导槽焊合L=515	Groove welding L=515	1	H=2500
	254128510003	内导槽焊合L=565	Groove welding L=565	1	H=2700
	254128510004	内导槽焊合L=640	Groove welding L=640	1	H=3000
	254128510005	内导槽焊合L=715	Groove welding L=715	1	H=3300
	254128510006	内导槽焊合L=765	Groove welding L=765	1	H=3500
	254128510007	内导槽焊合L=815	Groove welding L=815	1	H=3700
	254128510008	内导槽焊合L=890	Groove welding L=890	1	H=4000
22	910300500003	螺母GB889.1-M6-10	Nut GB889.1-M6-10	1	
23	254128520059	滑轮支板	Pulley frame	1	
24	255030520003	液压管总成(直)10-L2410-1SC-60°	Hydraulic hose assembly 10-L2410-1S	2	H=2500/2700
	252128525001	液压管总成(直)10-L2715-1SC-60°	Hydraulic hose assembly 10-L2715-1S	2	H=3000/3300
	252130520701	液压管总成(直)10-L2915-1SC-60°	Hydraulic hose assembly 10-L2915-1S	2	H=3500/3700
	256530520702	液压管总成(直)10-L3220-1SC-60°	Hydraulic hose assembly 10-L3220-1S	2	H=4000
25	910200200059	螺钉GB70.1-M8x30-8.8	Screw GB70.1-M8x30-8.8	2	
26	255029020024	接头(锁定弯)8-2xM16x1.5-60%d	Joint 8-2xM16x1.5-60°	2	
27	254142520001	液压管总成(90°)10-L300-1SC-60° -(	Hydraulic hose assembly (90°)10-L30(	2	
28	255042510004	侧移器总成(LH)	Side shiifter assembly(LH)	1	选装/optional
	255042510001	侧移器总成(LD)	Side shiifter assembly(LD)	1	选装/optional
	255042510002	侧移器总成(卡斯卡特)	Side shiifter assembly(CASCADE)	1	选装/optional

255098501037 双附加管路（二级全自由）/(two stage full free)

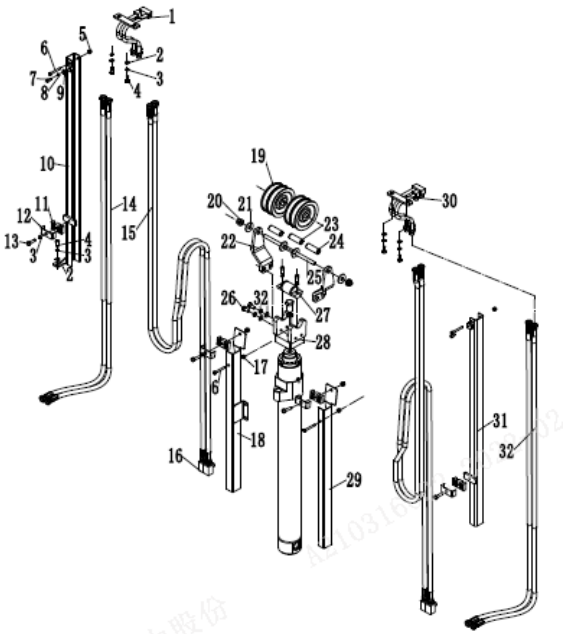

序号/NO	编码/SN	名称	Name	数量/QTY	备注/Remark
1	254129010001	过度钢管焊合	Excessive pipe welding	1	
2	910400100006	平垫圈GB97.1-8-200HV	Washer GB97.1-8-200HV	7	
3	910400500006	弹簧垫圈GB93-8	Washer GB93-8	13	
4	941100400001	螺钉M8x20-8.8	Screw M8x20-8.8	7	
5	910301300002	螺母GB17880.1-M6x16.5	Nut GB17880.1-M6x16.5	2	
6	910100300016	螺栓GB5783-M6x50-8.8	Blot GB5783-M6x50-8.8	4	
7	941100100009	螺钉M6x12-8.8	Screw M6X12-8.8	2	
8	910400100005	平垫圈GB97.1-6-200HV	Washer GB97.1-6-200HV	2	
9	910400500005	弹簧垫圈GB93-6	Washer GB93-6	2	
10	252129010701	外导槽焊合L=875	Groove welding L=875	2	H=2500
	252129010702	外导槽焊合L=975	Groove welding L=975	2	H=2700
	252129010703	外导槽焊合L=1125	Groove welding L=1125	2	H=3000
	252129010704	外导槽焊合L=1275	Groove welding L=1275	2	H=3300
	252129010705	外导槽焊合L=1375	Groove welding L=1375	2	H=3500
	252129010706	外导槽焊合L=1475	Groove welding L=1475	2	H=3700
	252129010707	外导槽焊合L=1675	Groove welding L=1675	2	H=4000
11	255028520034	胶管固定块	Pipe press fixedly piank	4	
12	255028520035	安装板(管夹)	Rubber pipe lump	4	
13	910200200059	螺钉GB70.1-M8x30-8.8	Screw GB70.1-M8x30-8.8	4	
14	255028520048	液压管总成(直)10-L1950-1SC-60°	Hydraulic hose assembly10-L1950-1S	2	H=2500
	255030520001	液压管总成(直)10-L2060-1SC-60°	Hydraulic hose assembly10-L2060-1S	2	H=2700
	252030520016	液压管总成(直)10-L2220-1SC-60°	Hydraulic hose assembly10-L2200-1S	2	H=3000
	255029020019	液压管总成(直)10-L2360-1SC-60°	Hydraulic hose assembly10-L2360-1S	2	H=3300
	251230520716	液压管总成(直)10-L2470-1SC-24°	Hydraulic hose assembly10-L2470-1S	2	H=3500
	255028520019	液压管总成(直)10-L2570-1SC-60°	Hydraulic hose assembly10-L2570-1S	2	H=3700
	254131020006	液压管总成(直)10-L2750-1SC-60°	Hydraulic hose assembly10-L2750-1S	2	H=4000
15	255030520003	液压管总成(直)10-L2410-1SC-60°	Hydraulic hose assembly 10-L2410-1S	4	H=2500/2700
	252128525001	液压管总成(直)10-L2715-1SC-60°	Hydraulic hose assembly 10-L2715-1S	4	H=3000/3300
	252130520701	液压管总成(直)10-L2915-1SC-60°	Hydraulic hose assembly 10-L2915-1S	4	H=3500/3700
	256530520702	液压管总成(直)10-L3220-1SC-60°	Hydraulic hose assembly 10-L3220-1S	4	H=4000
16	255029020024	接头(锁定弯)8-2xM16x1.5-60°	Joint 8-2xM16x1.5-60°	4	

255098501037 双附加管路（二级全自由）/(two stage full free)

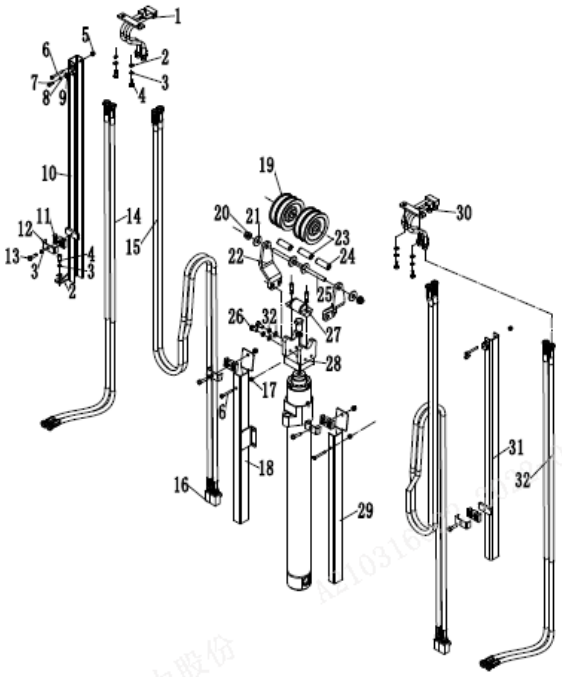

序号/NO	编码/SN	名称	Name	数量/QTY	备注/Remark
17	910300500003	螺母GB889.1-M6-10	Nut GB889.1-M6-10	2	H=2500
18	254129010012	内导槽焊合L=515	Groove welding (inner)L=515	1	H=2500
	254129010013	内导槽焊合L=565	Groove welding (inner)L=565	1	H=2700
	254129010014	内导槽焊合L=640	Groove welding (inner)L=640	1	H=3000
	254129010015	内导槽焊合L=715	Groove welding (inner)L=715	1	H=3300
	254129010016	内导槽焊合L=765	Groove welding (inner)L=765	1	H=3500
	254129010017	内导槽焊合L=815	Groove welding (inner)L=815	1	H=3700
	254129010018	内导槽焊合L=890	Groove welding (inner)L=890	1	H=4000
19	255030520021	滑轮Φ110x27(单槽)	pulleyΦ110x27	4	
20	910300500003	螺母GB889.1-M6-10	Nut GB889.1-M6-10	2	
21	910400200005	大垫圈GB96.1-12-200HV	Washer GB96.1-12-200HV	4	
22	254128520059	滑轮支板	Pulley frame	2	
23	254129020053	隔套Φ18xΦ14x56	BushΦ18xΦ14x56	1	
24	255030520022	衬套Φ20xΦ13x56	BushΦ20xΦ13x56	2	
25	254129020054	滑轮销轴	Axle	1	
26	910200200059	螺钉GB70.1-M8x30-8.8	Screw GB70.1-M8x30-8.8	4	
27	254143520056	轮轴Φ40x91	Axle Φ40x91	1	
28	254143510050	链轮座焊合	sprocket seat welded	1	
29	254128510002	内导槽焊合L=515	Groove welding (inner)L=515	1	H=2500
	254128510003	内导槽焊合L=565	Groove welding (inner)L=565	1	H=2700
	254128510004	内导槽焊合L=640	Groove welding (inner)L=640	1	H=3000
	254128510005	内导槽焊合L=715	Groove welding (inner)L=715	1	H=3300
	254128510006	内导槽焊合L=765	Groove welding (inner)L=765	1	H=3500
	254128510007	内导槽焊合L=815	Groove welding (inner)L=815	1	H=3700
	254128510008	内导槽焊合L=890	Groove welding (inner)L=890	1	H=4000
30	254128510001	过度钢管焊合	Excessive pipe welding	1	
31	255030520024	液压管总成(直)10-L1720-1SC-60°	Hydraulic hose assembly10-L1720-1S	2	H=2500
	255023520036	液压管总成(直)10-L1800-1SC-60°	Hydraulic hose assembly10-L1800-1S	2	H=2700
	255028520048	液压管总成(直)10-L1950-1SC-60°	Hydraulic hose assembly10-L1950-1S	2	H=3000
	254130520007	液压管总成(直)10-L2140-1SC-60°	Hydraulic hose assembly10-L2140-1S	2	H=3300
	252030520016	液压管总成(直)10-L2220-1SC-60°	Hydraulic hose assembly10-L2220-1S	2	H=3500

255098501037 双附加管路（二级全自由）/(two stage full free)

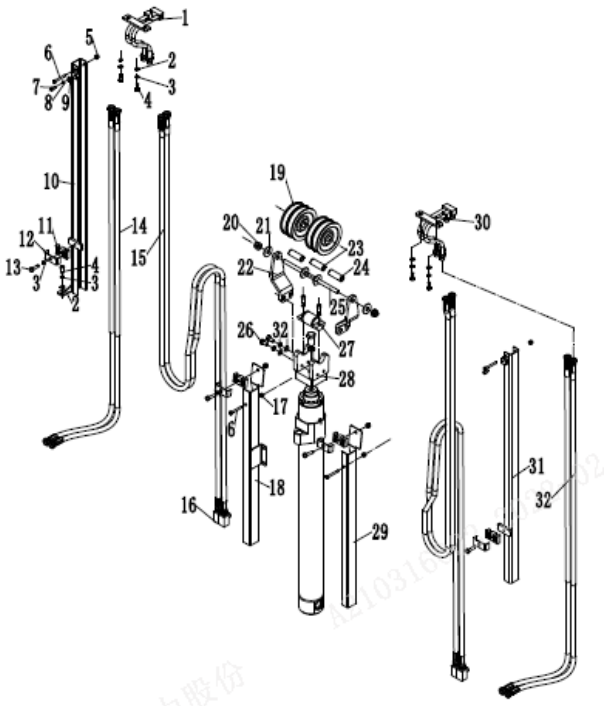

序号/NO	编码/SN	名称	Name	数量/QTY	备注/Remark
31	255031020009	液压管总成(直)10-L2340-1SC-60°	Hydraulic hose assembly10-L2340-1S	2	H=3700
	255031020100	液压管总成(直)10-L2530-1SC-60°	Hydraulic hose assembly10-L2530-1S	2	H=4000
32	252128510701	外导槽焊合L=875	Groove welding L=875	1	H=2500
	252128510702	外导槽焊合L=975	Groove welding L=975	1	H=2700
	252128510703	外导槽焊合L=1125	Groove welding L=1125	1	H=3000
	252128510704	外导槽焊合L=1275	Groove welding L=1275	1	H=3300
	252128510705	外导槽焊合L=1375	Groove welding L=1375	1	H=3500
	252128510706	外导槽焊合L=1475	Groove welding L=1475	1	H=3700
	252128510707	外导槽焊合L=1675	Groove welding L=1675	1	H=4000

255098501038 门架(三级全自由门架)/MAST(three stage full free)

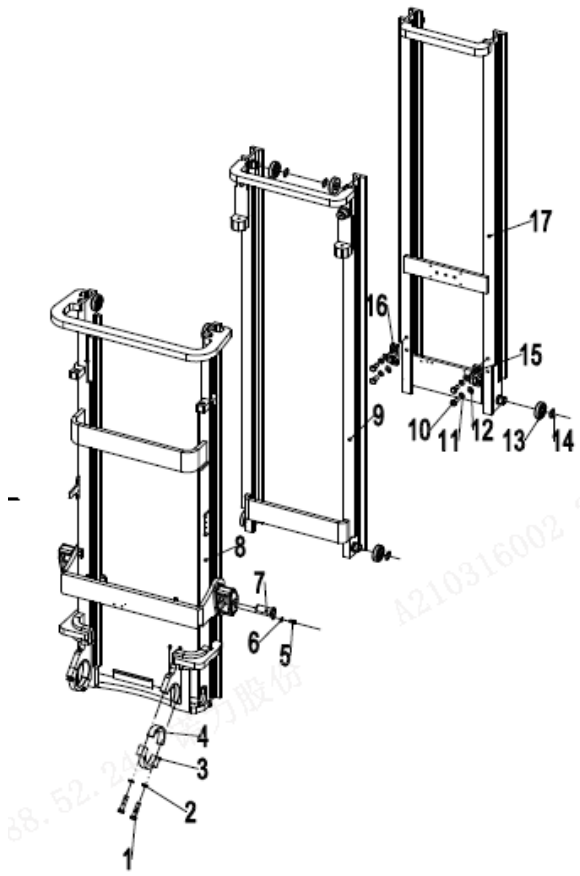

序号/NO	编码/SN	名称	Name	数量/QTY	备注/Remark
1	910100200016	螺栓GB5785-M16x1.5x70-8.8	Bolt GB5785-M16x1.5x70-8.8	4	
2	910400500010	弹簧垫圈GB93-16	Washer GB93-16	9	
3	254144020067	盖	Bearing cover	2	
4	254144020063	轴瓦	Bearing bush	2	
5	910100300035	螺栓GB5783-M10x20-8.8	Bolt GB5783-M10x20-8.8	4	
6	910400500007	弹簧垫圈GB93-10	Washer GB93-10	10	
7	255044010057	带耳轴Φ30x82	Axle Φ30x82	2	
8	252144511001	外门架焊合(4000)	Outer mast 4000	1	H=4000
	252144511002	外门架焊合(4350)	Outer mast 4350	1	H=4350
	252144511003	外门架焊合(4500)	Outer mast 4500	1	H=4500
	252144511004	外门架焊合(4800)	Outer mast 4800	1	H=4800
	252144511005	外门架焊合(5000)	Outer mast 5000	1	H=5000
	252144511006	外门架焊合(5500)	Outer mast 5500	1	H=5500
	252144511007	外门架焊合(6000)	Outer mast 6000	1	H=6000
9	252144513001	中门架焊合(4000)	Middle mast 4000	1	H=4000
	252144513002	中门架焊合(4350)	Middle mast 4350	1	H=4350
	252144513003	中门架焊合(4500)	Middle mast 4500	1	H=4500
	252144513004	中门架焊合(4800)	Middle mast 4800	1	H=4800
	252144513005	中门架焊合(5000)	Middle mast 5000	1	H=5000
	252144513006	中门架焊合(5500)	Middle mast 5500	1	H=5500
	252144513007	中门架焊合(6000)	Middle mast 6000	1	H=6000
10	910100400028	螺栓GB5786-M16x1.5x35-8.8	Bolt GB5786-M16x1.5x35-8.8	4	
11	910400500010	弹簧垫圈GB93-16	WasherGB93-16	9	
12	910400100010	平垫圈GB97.1-16-200HV	Washer GB97.1-16-200HV	4	
13	940200300048	复合滚轮Φ79.1-range=52.5-56.5	Composite roller Φ 79.1 = 52.5-56.5	8	
13	940200300047	复合滚轮Φ78.80-range=52.5-56.5	Composite roller Φ 78.8 = 52.5-56.5	8	
14	910401300020	轴用弹性挡圈GB894.1-40	Cir clip GB894.1-40	8	
15	254144520030	内门架链条固定板	Chain plate	1	
16	252144520030	内门架链条固定板	Chain plate	1	
17	252144512001	内门架焊合(4000)	Inner mast 4000	1	H=4000
	252144512002	内门架焊合(4350)	Inner mast 4350	1	H=4350

255098501038 门架(三级全自由门架)/MAST(three stage full free)

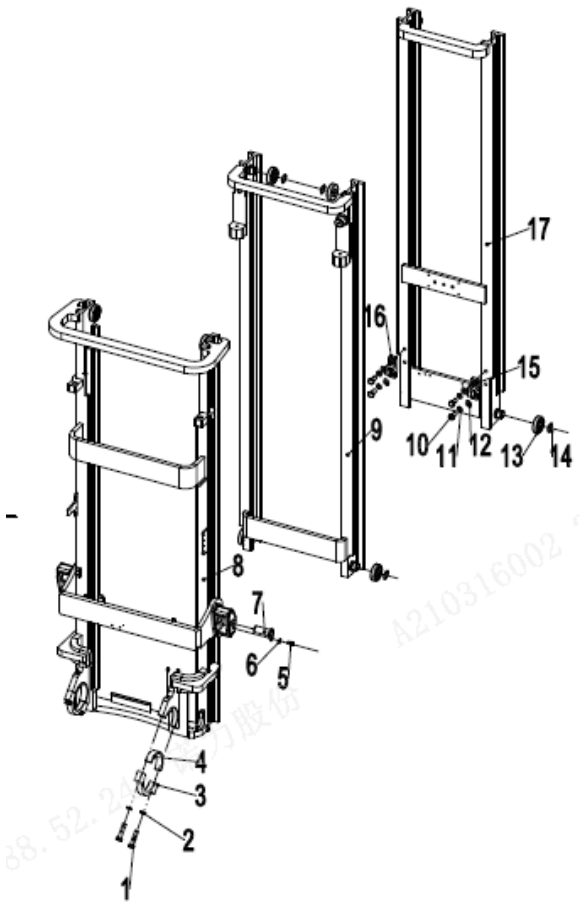

序号/NO	编码/SN	名称	Name	数量/QTY	备注/Remark
17	252144512003	内门架焊合(4500)	Inner mast 4500	1	H=4500
	252144512004	内门架焊合(4800)	Inner mast 4800	1	H=4800
	252144512005	内门架焊合(5000)	Inner mast 5000	1	H=5000
	252144512006	内门架焊合(5500)	Inner mast 5500	1	H=5500
	252144512007	内门架焊合(6000)	Inner mast 6000	1	H=6000

货叉架）三级全自由 Fork carrier(three stage full free)

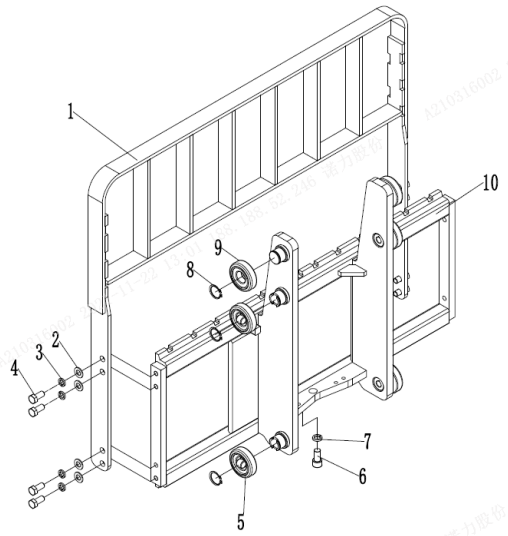

序号/NO	编码/SN	名称	Name	数量/QTY	备注/Remark
1	255040510001	挡货架焊合(1040x986)	Load backrest welding	1	
2	910400100009	平垫圈GB97.1-14-200HV	Washer GB97.1-14-200HV	8	
3	910400500009	弹簧垫圈GB93-14	Washer GB93-14	8	
4	910100300062	螺栓GB5783-M14x30-8.8	Bolt GB5783-M14x30-8.8	8	
5	940200300049	复合滚轮Φ78.8-range=52.5-56.5(外	Composite roller Φ 78.8 = 52.5-56.5	4	
	940200300050	复合滚轮Φ79.10-range=52.5-56.5(外	Composite roller Φ 79.1 = 52.5-56.5	4	
	940200300032	复合滚轮Φ79.4-range=52.5-56.5(外	Composite roller Φ 79.4 = 52.5-56.5	4	
6	910200200119	螺钉GB70.1-M16x30-8.8	Screw GB70.1 M16x30-8.8	1	
7	910400500010	弹簧垫圈GB93-16	Washer GB93-16	1	
8	910401300018	轴用弹性挡圈GB894.1-35	Circlip GB894.1-35	6	
9	940200100043	主滚轮Φ78.80xΦ35x22.5(外圈斜1°)	Main roller Φ 78.80 x Φ 35 x22. 5	2	
	940200100044	主滚轮Φ79.1xΦ35x22.5(外圈斜1°)	Main roller Φ 79.1 x Φ 35 x22. 5	2	
	940200100039	主滚轮Φ79.1xΦ35x22.5(外圈斜1°)	Main roller Φ 79.4 x Φ 35 x22. 5	2	
10	252138013001	货叉架焊合A(三级全自由门架)	Fork carrier weldind（sthree stage full	1	

货叉架）三级全自由（大复合滚轮） Fork carrier(three stage full free)

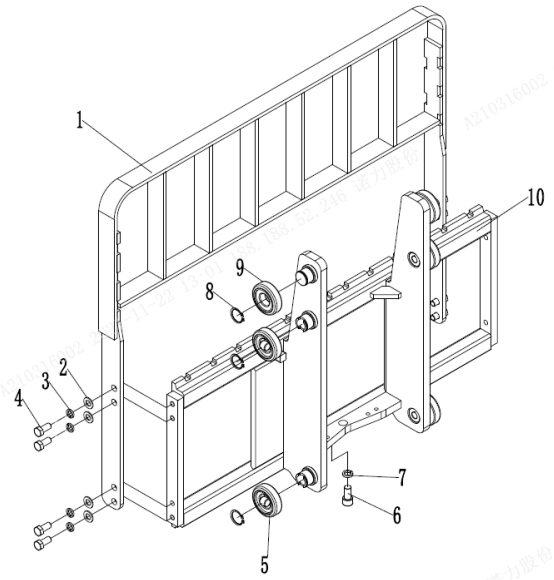

序号/NO	编码/SN	名称	Name	数量/QTY	备注/Remark
1	255040510001	挡货架焊合(1040x986)	Load backrest welding	1	
2	910400100009	平垫圈GB97.1-14-200HV	Washer GB97.1-14-200HV	8	
3	910400500009	弹簧垫圈GB93-14	Washer GB93-14	8	
4	910100300062	螺栓GB5783-M14x30-8.8	Bolt GB5783-M14x30-8.8	8	
5	252144023001		Composite roller Φ78.8xΦ45x23	4	
	252144023002	复合滚轮Φ78.8xΦ45x23(外圈斜1.3°	Composite roller Φ79.1xΦ45x23	4	
	252144023003	复合滚轮Φ79.4xΦ45x23(外圈斜1.3°	Composite roller Φ79.4xΦ45x23	4	
	252144023004	复合滚轮Φ78.4xΦ45x23(外圈斜1.3°	Composite roller Φ78.4xΦ45x23	4	
6	910200200119	螺钉GB70.1-M16x30-8.8	Screw GB70.1 M16x30-8.8	1	
7	910400500010	弹簧垫圈GB93-16	Washer GB93-16	1	
8	910401300018	轴用弹性挡圈GB894.1-35	Circlip GB894.1-35	6	
9	940200100043	主滚轮Φ78.80xΦ35x22.5(外圈斜1°)	Main roller Φ 78.80 x Φ 35 x22. 5	2	
	940200100044	主滚轮Φ79.1xΦ35x22.5(外圈斜1°)	Main roller Φ 79.1 x Φ 35 x22. 5	2	
	940200100039	主滚轮Φ79.1xΦ35x22.5(外圈斜1°)	Main roller Φ 79.4 x Φ 35 x22. 5	2	
10	252138013001	货叉架焊合A(三级全自由门架)	Fork carrier weldind（sthree stage full	1	

货叉架）三级全自由 Fork carrier(three stage full free)

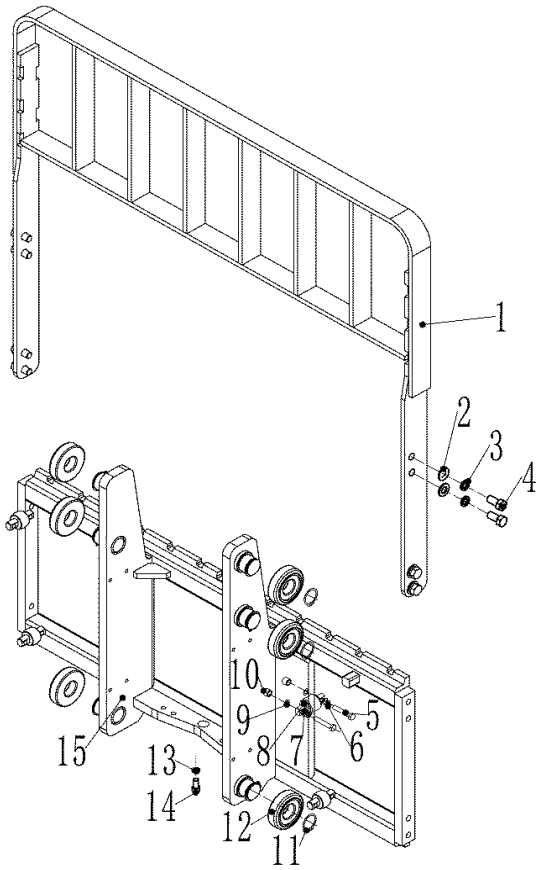

序号/NO	编码/SN	名称	Name	数量/QTY	备注/Remark
1	255040510001	挡货架焊合(1040x986)	Fork carrier welding (1040x986)	1	
2	910400100009	平垫圈GB97.1-14-200HV	Washer GB97.1-14-200HV	8	
3	910400500009	弹簧垫圈GB93-14	Spring Washer GB93-14	8	
4	910100300062	螺栓GB5783-M14x30-8.8	Bolt GB5783-M14x30-8.8	8	
5	910100300027	螺栓GB5783-M8x45-8.8	Bolt GB5783-M8x45-8.8	8	
6	910400500006	弹簧垫圈GB93-8	Spring Washer GB93-8	8	
7	910400100006	平垫圈GB97.1-8-200HV	Washer GB97.1-8-200HV	8	
8	940200200003	侧滚轮Φ34-CD=45	Side roller Φ34-CD=45	4	
9	281338023004	侧滚轮调整垫	Side roller adjustment pad	16	
10	281338023003	侧滚轮调整套	Side roller adjusting sleeve	8	
11	910401300018	轴用弹性挡圈GB894.1-35	Washer GB894.1-35	6	
12	940200100043	主滚轮Φ78.80xΦ35x22.5(外圈斜1	Roller Φ78.80xΦ35x22.5	6	选装/optional
12	940200100044	主滚轮Φ79.10xΦ35x22.5(外圈斜1	Roller Φ79.10xΦ35x22.5	6	选装/optional
12	940200100039	主滚轮Φ79.40xΦ35x22.5(外圈斜1	Roller Φ79.40xΦ35x22.5	6	选装/optional
13	910400500007	弹簧垫圈GB93-10	Spring Washer GB93-10	1	
14	910200200077	螺钉GB70.1-M10x30-8.8	Screw GB70.1-M10x30-8.8	1	
15	252138013002	货叉架焊合A(三级全自由门架)	Fork carrier welding	1	单独侧滚

255098501040 短升降油缸（三级全自由）/Short lifting cylinder（three stage full free）

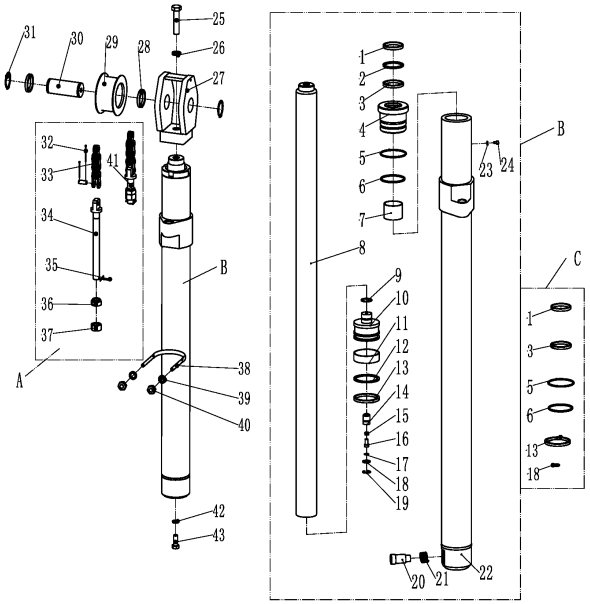

序号/NO	编码/SN	名称	Name	数量/QTY	备注/Remark
A	254143515001	起升链条LH1266-67	Lifting chain LH1266-67	2	H=4000
	254143510061	起升链条LH1266-71	Lifting chain LH1266-71	2	H=4350
	254144510015	起升链条LH1266-73	Lifting chain LH1266-73	2	H=4500
	254144510016	起升链条LH1266-75	Lifting chain LH1266-75	2	H=4800
	254144510017	起升链条LH1266-77	Lifting chain LH1266-77	2	H=5000
	254144540004	起升链条LH1266-81	Lifting chain LH1266-81	2	H=5500
	252143510071	起升链条LH1266-85	Lifting chain LH1266-85	2	H=6000
B	254144510030	油缸(M)(H=4000)	Cylinder (M)(H=4000)	1	H=4000
	254144510031	油缸(M)(H=4350)	Cylinder (M)(H=4350)	1	H=4350
	254144510032	油缸(M)(H=4500)	Cylinder (M)(H=4500)	1	H=4500
	254144510033	油缸(M)(H=4800)	Cylinder (M)(H=4800)	1	H=4800
	254144510034	油缸(M)(H=5000)	Cylinder (M)(H=5000)	1	H=5000
	254144510035	油缸(M)(H=5500)	Cylinder (M)(H=5500)	1	H=5500
	254144510036	油缸(M)(H=6000)	Cylinder (M)(H=6000)	1	H=6000
C	254198510005	密封件修理包(三级全自由中缸)	Seal kits (three stage full free lifting cy	1	
1	▲	防尘圈	Dust ring	1	
2	▲	挡片50x60x3	Catch 50×60×3	1	
3	▲	轴用密封	Seal ring	1	
4	▲	导向套	Glide sleeve	1	
5	▲	O型密封圈D75	O ring D75	1	
6	▲	O型密封圈D70	O ring D75	1	
7	▲	钢背轴承 5035	Bearing5035	1	
8	▲	活塞杆	Piston rod	1	
9	▲	钢丝挡圈	Circlip	1	
10	▲	活塞体	Piston assembly	1	
11	▲	支承环70x20x3	Support ring 70x20x3	1	
12	▲	挡片70x60x3	Catch 70x60x3	1	
13	▲	孔用密封圈	Seal ring	1	
14	▲	阀套	Valve cover	1	
15	▲	弹簧	Spring	1	
16	▲	阀芯	Valve plug	1	

255098501040 短升降油缸（三级全自由）/Short lifting cylinder（three stage full free）

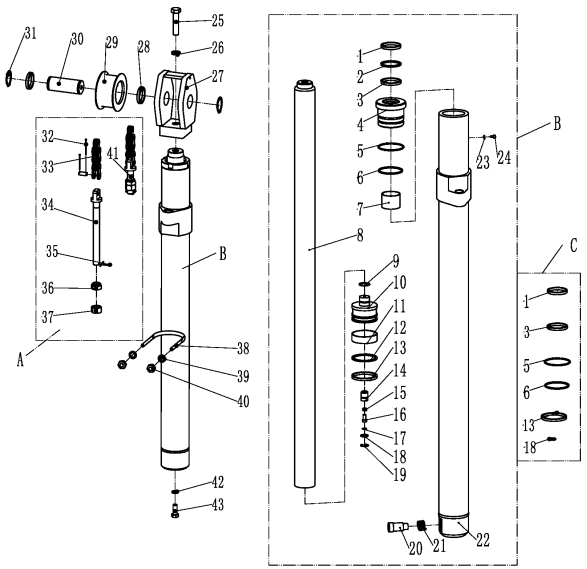

序号/NO	编码/SN	名称	Name	数量/QTY	备注/Remark
17	▲	挡片	Catch	1	
18	▲	O型密封圈D20x2.4	O ring	1	
19	▲	挡圈 22	Circlip 22	1	
20	▲	滑阀	Slide valve	1	
21	▲	弹簧2.3x15x48.5	Spring2.3x15x48.5	1	
22	▲	缸体	Cylinder	1	
23	▲	垫片	Spacer	1	
24	▲	内六角圆柱头螺钉M5x5	Screw M5x5	1	
25	910100300069	螺栓5783-M16x35-8.8	Bolt GB5783-M16x35-8.8	1	
26	910400500010	弹簧垫圈GB93-16	SpringWasherGB93-16	1	
27	254144510020	链轮座	Chain wheel base	1	
28	254144520029	链轮垫圈	Chain wheel washer	1	
29	940200500009	链轮轴承785208-00-φ95xφ40x47	Chain wheel bearing 785208-00-φ95x	1	
30	254144520031	链轮轴	Chain wheel bearing	1	
31	910401300020	轴用弹性挡圈GB894.1-40	Circlip GB894.1-40	2	
32	910600600011	开口销GB91-2x12	split pin2x12	2	
33	910900400013	板式链GB6074-LH1266	LH1266 chain	2	
34	254143520070	链条螺栓M18x1.5x185.5	Joint	2	
35	910600600032	开口销GB91-3.2x40	Split pin 3.2x40	2	
36	255044020158	球面螺母M18x1.5	Nut M18x1.5	2	
37	910300400007	螺母GB6173-M18x1.5-05	Nut M18x1.5	2	
38	254144520032	油缸固定环	Hydro cylinder fixed loop	1	
39	910400500006	弹簧垫圈GB93-8	Spring Washer GB93-8	2	
40	910300100006	螺母GB6170-M8-10	Bolt GB6170-M8-10	2	
41	254143520071	链条螺栓M18x1.5x90.5	Joint	2	
42	910400500008	弹簧垫圈GB93-12	SpringWasherGB93-12	1	
43	910100400009	螺栓GB5786-M12x1.25x25-8.8	BoltGB5786-M12x1.25x25-8.8	1	

255098501041 起升油缸(三级全自由)/Lifting cylinder(three stage full free)

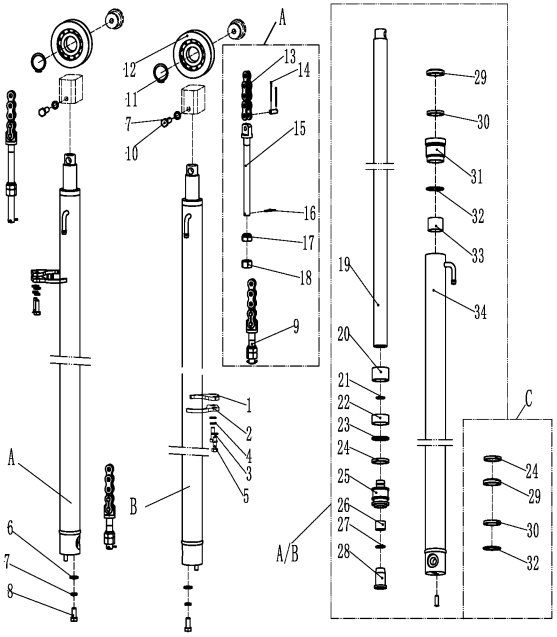

序号/NO	编码/SN	名称	Name	数量/QTY	备注/Remark
A	254144510044	油缸(L)(H=4000)	Cylinder (L)(H=4000)	1	H=4000
	254144510045	油缸(L)(H=4350)	Cylinder (L)(H=4350)	1	H=4350
	254144510046	油缸(L)(H=4500)	Cylinder (L)(H=4500)	1	H=4500
	254144510047	油缸(L)(H=4800)	Cylinder (L)(H=4800)	1	H=4800
	254144510048	油缸(L)(H=5000)	Cylinder (L)(H=5000)	1	H=5000
	254144510049	油缸(L)(H=5500)	Cylinder (L)(H=5500)	1	H=5500
	254144510050	油缸(L)(H=6000)	Cylinder (L)(H=6000)	1	H=6000
B	254144510051	油缸(R)(H=4000)	CyRinder (R)(H=4000)	1	H=4000
	254144510052	油缸(R)(H=4350)	CyRinder (R)(H=4350)	1	H=4350
	254144510053	油缸(R)(H=4500)	CyRinder (R)(H=4500)	1	H=4500
	254144510054	油缸(R)(H=4800)	CyRinder (R)(H=4800)	1	H=4800
	254144510055	油缸(R)(H=5000)	CyRinder (R)(H=5000)	1	H=5000
	254144510056	油缸(R)(H=5500)	CyRinder (R)(H=5500)	1	H=5500
	254144510057	油缸(R)(H=6000)	CyRinder (R)(H=6000)	1	H=6000
C	254198510003	密封件修理包(三级全自由起升缸)	Seal kits(three stage full free lifting cyl	2	
D	254144014002	起升链条LH1223T-93	Lifting chainLH1223T-93	2	H=4000
	254144014003	起升链条LH1223T-101	Lifting chainLH1223T-101	2	H=4350
	254144514002	起升链条LH1223T-103	Lifting chainLH1223T-103	2	H=4500
	254144014004	起升链条LH1223T-109	Lifting chainLH1223T-109	2	H=4800
	254144014005	起升链条LH1223T-113	Lifting chainLH1223T-113	2	H=5000
	254144514008	起升链条LH1223T-123	Lifting chainLH1223T-123	2	H=5500
	254144514009	起升链条LH1223T-131	Lifting chainLH1223T-131	2	H=6000
1	254144520093	内抱箍	Inner hoop	2	
2	254144520092	外抱箍	Outer hoop	2	
3	910400500007	弹簧垫圈GB93-10	Washer GB93-10	4	
4	910400100007	平垫圈GB97.1-10-200HV	Washer GB97.1-10-200HV	4	
5	910100300037	螺栓GB5783-M10x30-8.8	BoltM10x30	4	
6	910400100008	平垫圈GB97.1-12-200HV	Washer GB97.1-12-200HV	2	
7	910400500008	弹簧垫圈GB93-12	Washer GB93-12	4	
8	910100400009	螺栓GB5786-M12x1.25x25-8.8	Bolt GB5786-M12x1.25x25-8.8	2	
9	251044020064	链条螺栓M16x1.5-90	Chain bolt	2	

255098501041 起升油缸(三级全自由)/Lifting cylinder(three stage full free)

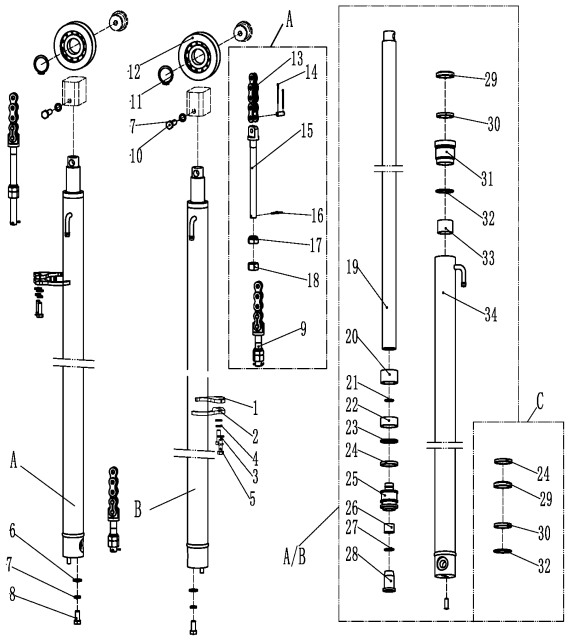

序号/NO	编码/SN	名称	Name	数量/QTY	备注/Remark
10	910100300053	螺栓GB5783-M12x45-8.8	Bolt GB5783-M12x45-8.8	2	
11	910401300020	轴用弹性挡圈GB894.1-40	Circlip GB894.1-40	2	
12	940200500004	链轮轴承780708K1-Φ95xΦ40x21	Chain wheel bearing 780708K1-Φ95x	2	
13	254144020068	板式链条LH1223T	LH1223T chain	2	
14	910600600019	开口销GB91-2.5x25	Split pin 2.5x25	2	
15	254144020065	链条螺栓M16x1.5-85.5	Chain bolt M16x1.5-85.5	2	
16	910600600030	开口销GB91-3.2x30	Split pin 3.2x30	2	
17	254144020066	球面螺母M16x1.5	Nut M16x1.5	2	
18	910300200008	螺母GB6171-M16x1.5-10	Nut M16x1.5	2	
19	▲	活塞杆	Piston rod	1	
20	▲	调整套35.5x44xL1	Adjusting bushing 35.5x44xL1	1	
21	▲	钢丝挡圈	Circlip	1	
22	▲	铜套	Copper bushing	1	
23	▲	活塞	Piston	1	
24	▲	孔用密封圈	Seal ring 45x35x6	1	
25	▲	钢丝挡圈	Circlip		
26	▲	缓冲环	Buffer ring	1	
27	▲	防尘圈	Dust ring	1	
28	▲	导向套	Guide bushing	1	
29	▲	轴用密封圈	Seal ring	1	
30	▲	O型密封圈	O seal ring	1	
31	▲	导向套	Guide bushing	1	
32	▲	O型密封圈	O seal ring	1	
33	▲	钢背轴承3530	Bearing 3530	1	
34	▲	缸体	Cylinder	1	

255098501042 门架起升管路（三级全自由门架）/SINGLE ADDITIONAL TUBE(three stage full free)

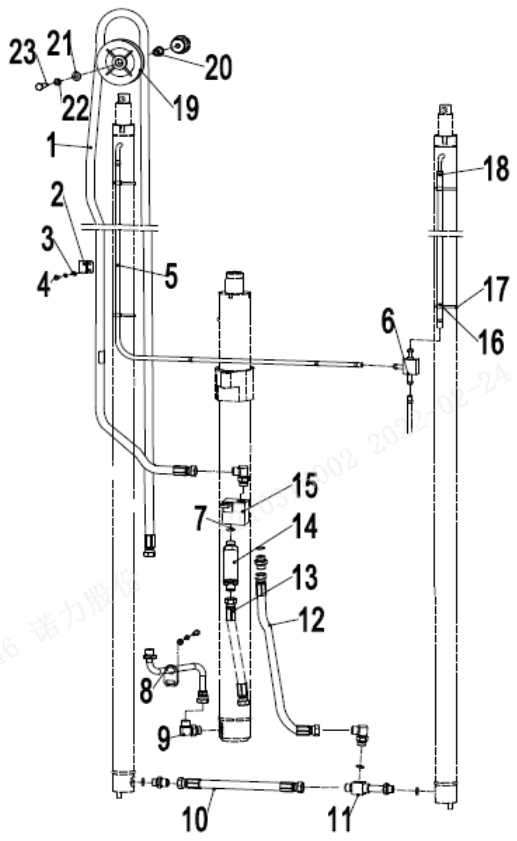

序号/NO	编码/SN	名称	Name	数量/QTY	备注/Remark
1	254144520041	液压管总成(直)12-L2900-2SC-60°	Hydraulic hose assembly 12-L2900-2S	1	H=4000
1	254144520042	液压管总成(直)12-L3150-2SC-60°	Hydraulic hose assembly 12-L3150-2S	1	H=4350
1	254144520043	液压管总成(直)12-L3250-2SC-60°	Hydraulic hose assembly 12-L3250-2S	1	H=4500
1	254144520044	液压管总成(直)12-L3450-2SC-60°	Hydraulic hose assembly 12-L3450-2S	1	H=4800
1	254144520045	液压管总成(直)12-L3650-2SC-60°	Hydraulic hose assembly 12-L3650-2S	1	H=5000
1	254144520046	液压管总成(直)12-L3950-2SC-60°	Hydraulic hose assembly 12-L3950-2S	1	H=5500
1	254144520047	液压管总成(直)12-L4350-2SC-60°	Hydraulic hose assembly 12-L4350-2S	1	H=6000
2	255044520132	油管夹	Tubing clamps	4	
3	910400500005	弹簧垫圈GB93-6	Spring washer gb93-6	4	
4	910200200035	螺钉GB70.1-M6x16-8.8	Screw GB70.1 M6x16-8.8	4	
5	900200301004	软管13x1.5/PE	PE Supple pipe13x1.5	3	
6	255044020118	接头(三通)	Connector (tee)	1	
7	▲	O形圈-内19x2.65	O - inner 19x2.65	3	
8	252144519001	中缸过渡钢管焊合	Medium cylinder transition steel pipe w	1	
9	255043520022	接头（锁定弯）12-M27x2-M22x1.5	Connector (lock bend) 12-M27x2-M22	1	
10	254144020039	液压管总成(直)12-L345-2SC-60°	Hydraulic pipe assembly (straight) 12-	1	
11	254144020038	接头(三通)	Connector (tee)	1	
12	252144529002	液压管总成(直)12-L530-2SC-60°	Hydraulic pipe assembly (straight) 12-	1	
13	252144529003	液压管总成(直)15-L800-2SC-60°	Hydraulic pipe assembly 15-L800-2SC	1	
14	950700300001	限速阀XSF-F16L-40	The speed limit valve XSF-F16L-40	1	
15	252144519002	三通焊合	Tee welded	1	
16	255044020042	压板	clamp	4	
17	921600400001	扎带4x250	4 x250 tie	6	
18	255044020043	卡箍13	Clamp 13	6	
19	255030520021	滑轮Φ110x27(单槽)	Pulley Φ x27 110 (single slot)	1	
20	255044520081	衬套(带肩)Φ20xΦ13x28	Bushings (shoulder) Φ Φ 13 x 20 x28	1	
21	910400200005	大垫圈GB96.1-12-200HV	big washer GB96.1-12-200HV	1	
22	910400500008	弹簧垫圈GB93-12	Spring washer gb93-12	1	
23	910100300054	螺栓GB5783-M12x50-8.8	Bolt GB5783 M12x50-8.8	1	

255098501043 侧移器及管路安装（三级全自由）/Side shifter and pipeline installation(three stage full free)

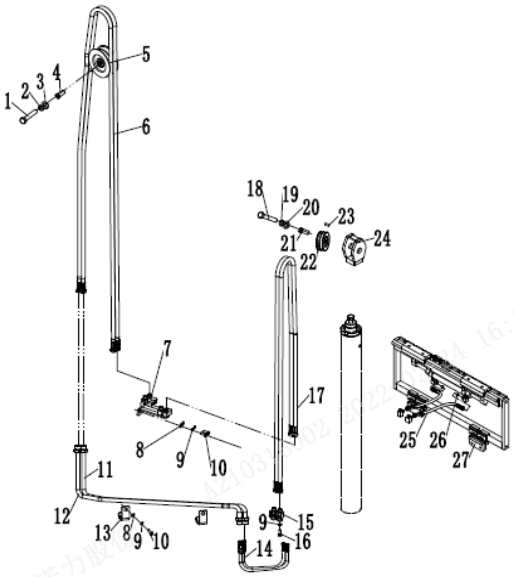

序号/NO	编码/SN	名称	Name	数量/QTY	备注/Remark
1	910100100054	螺栓GB5782-M12x80-8.8	Bolt GB5782-M12x80-8.8	2	
2	910400500008	弹簧垫圈GB93-12	Washe GB93-12	2	
3	910400200005	大垫圈GB96.1-12-200HV	Washe GB96.1-12-200HV	2	
4	254130520016	衬套Φ20xΦ13x43	Bushing Φ20xΦ13x43	1	
5	255030520020	滑轮Φ120x42(双槽)	Pulley Φ120x42	1	
6	255028520019	液压管总成(直)10-L2570-1SC-60°	Hydraulic hose assembly 10-L2570-1S	1	H=4000
6	254130520001	液压管总成(直)10-L2810-1SC-60°	Hydraulic hose assembly 10-L2810-1S	2	H=4350
6	252130520701	液压管总成(直)10-L2915-1SC-60°	Hydraulic hose assembly 10-L2915-1S	2	H=4500
6	254130520002	液压管总成(直)10-L3110-1SC-60°	Hydraulic hose assembly 10-L3110-1S	2	H=4800
6	256528520901	液压管总成(直)10-L3310-1SC-60°	Hydraulic hose assembly 10-L3310-1S	2	H=5000
6	255028520059	液压管总成(直)10-L3600-1SC-60°	Hydraulic hose assembly 10-L3600-1S	2	H=5500
6	252130520702	液压管总成(直)10-L4015-1SC-60°	Hydraulic hose assembly 10-L4015-1S	2	H=6000
7	254130510001	侧移钢管焊合	Side moving steel pipe welding	1	
8	910400100006	平垫圈GB97.1-8-200HV	Washe GB97.1-8-200HV	7	
9	910400500006	弹簧垫圈GB93-8	Washe GB93-8	7	
10	910100300020	螺栓GB5783-M8x16-8.8	Bolt GB5783-M8x16-8.8	5	
11	252130510001	液压钢管总成1	Hydraulic steel pipe assembly1	1	
12	252130510002	液压钢管总成2	Hydraulic steel pipe assembly2	1	
13	252130520001	管夹	pipe clamp	3	
14	252130520003	液压管总成(直)10-L930-1SC-60°	Hydraulic hose assembly 10-L930-1SC	2	
15	255029020024	接头(锁定弯)8-2xM16x1.5-60°	Joint (locking bend))8-2xM16x1.5-60°	2	
16	910200200059	螺钉GB70.1-M8x30-8.8	screw GB70.1-M8x30-8.8	2	
17	263028520004	液压管总成(直)10-L1690-1SC-60°	Hydraulic hose assembly 10-L1690-1S	4	H=4000
17	252128521001	液压管总成(直)10-L1810-1SC-60°	Hydraulic hose assembly 10-L1810-1S	4	H=4350
17	254130520005	液压管总成(直)10-L1890-1SC-60°	Hydraulic hose assembly 10-L1890-1S	4	H=4500
17	255031020705	液压管总成(直)10-L1980-1SC-60°	Hydraulic hose assembly 10-L1980-1S	4	H=4800
17	255030520711	液压管总成(直)10-L2090-1SC-60°	Hydraulic hose assembly 10-L2090-1S	4	H=5000
17	253528520009	液压管总成(直)10-L2250-1SC-60°	Hydraulic hose assembly 10-L2250-1S	4	H=5500
17	263030520017	液压管总成(直)10-L2390-1SC-60°	Hydraulic hose assembly 10-L2390-1S	4	H=6000
18	910100100054	螺栓GB5782-M12x80-8.8	Bolt GB5782-M12x80-8.8	2	
19	910400500008	弹簧垫圈GB93-12	Washe GB93-12	2	

255098501043 侧移器及管路安装（三级全自由）/Side shifter and pipeline installation(three stage full free)

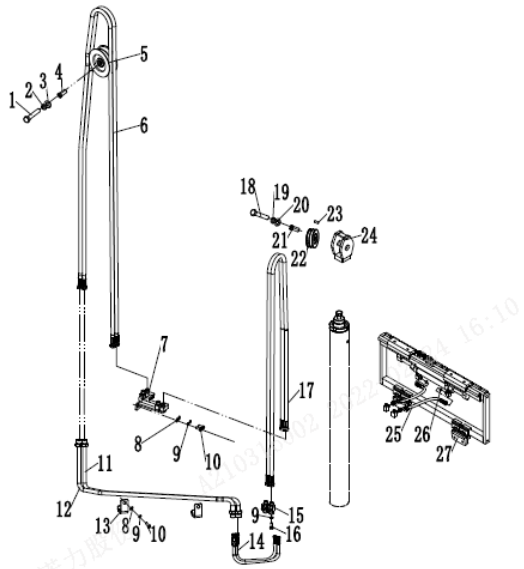

序号/NO	编码/SN	名称	Name	数量/QTY	备注/Remark
20	910400200005	大垫圈GB96.1-12-200HV	WasherGB96.1-12-200HV	4	
21	255030520022	衬套Φ22xΦ13x56	Bushing Φ22xΦ13x56	1	
22	255030520021	滑轮Φ110x27(单槽)	Pulley Φ110x27	2	
23	254130520014	滑轮挡杆	The pulley block rod	1	
24	254144510020	链轮座	chain pulley seat	1	
25	254142520001	液压管总成(90°)10-L300-1SC-60°-(	Hydraulic hose assembly (90°)10-L30(	2	
26	910800100001	O形圈-内9.5x1.8	O-ring-9.5x1.8	2	
27	255042510004	侧移器总成(LH)	Side shiifter assembly(LH)	1	选装/optional
27	255042510001	侧移器总成(LD)	Side shiifter assembly(LD)	1	选装/optional
27	255042510002	侧移器总成(卡斯卡特)	Side shiifter assembly(CASCADE)	1	选装/optional

255098501044 双附加管路（三级全自由）/(three stage full free)

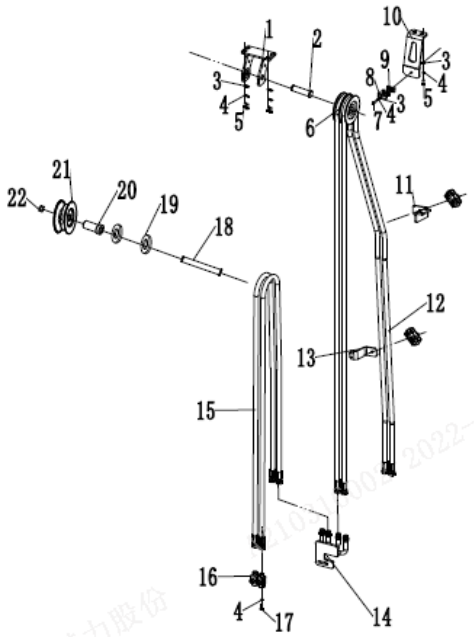

序号/NO	编码/SN	名称	Name	数量/QTY	备注/Remark
1	254131010002	滑轮支架焊合	Pulley support welded	1	
2	255031020004	带耳轴Φ20x70	Axis Φ20x70	1	
3	910400100006	平垫圈GB97.1-8-200HV	WasherGB97.1-8-200HV	2	
4	910400500006	弹簧垫圈GB93-8	Washe GB93-8	2	
5	910100300020	螺栓GB5783-M8x16-8.8	Bolt GB5783-M8x16-8.8	2	
6	255031020007	滑轮Φ90x22(单槽)	Pulley Φ90x22	2	
7	910200200062	螺钉GB70.1-M8x45-8.8	Screw GB70.1-M8x45-8.8	3	
8	255028520035	安装板(管夹)	mounting plate	3	
9	255028520034	胶管固定块	Pipe press fixedly piank	6	
10	281231020101	支架	Holder	1	
11	281231020102	胶管安装板	Hose mounting plate	1	
12	281228011001	液压管总成(直)10-L3700-1SC-60°	Hydraulic pipe welding10-L3700-1SC-	2	H=4000
	256529020902	液压管总成(直)10-L3980-1SC-60°	Hydraulic pipe welding10-L3980-1SC-	2	H=4350
	256530520704	液压管总成(直)10-L4070-1SC-60°	Hydraulic pipe welding10-L4070-1SC-	2	H=4500
	255028520048	液压管总成(直)10-L4300-1SC-60°	Hydraulic pipe welding10-L4300-1SC-	2	H=4800
	255028520048	液压管总成(直)10-L4500-1SC-60°	Hydraulic pipe welding10-L4500-1SC-	2	H=5000
	255028520048	液压管总成(直)10-L4700-1SC-60°	Hydraulic pipe welding10-L4700-1SC-	2	H=5500
	281227511006	液压管总成(直)10-L5200-1SC-60°	Hydraulic pipe welding10-L5200-1SC-	2	H=6000
13	252131020001	胶管固定板(四联)	Rubber hose fixing plate	1	
14	254131010001	钢管(四联阀)焊合	Hydraulic pipe welding	1	
15	263028520004	液压管总成(直)10-L1690-1SC-60°	Hydraulic hose assembly 10-L1690-1S	4	H=4000
	252128521001	液压管总成(直)10-L1810-1SC-60°	Hydraulic hose assembly 10-L1810-1S	4	H=4350
	254130520005	液压管总成(直)10-L1890-1SC-60°	Hydraulic hose assembly 10-L1890-1S	4	H=4500
	255031020705	液压管总成(直)10-L1980-1SC-60°	Hydraulic hose assembly 10-L1980-1S	4	H=4800
	255030520711	液压管总成(直)10-L2090-1SC-60°	Hydraulic hose assembly 10-L2090-1S	4	H=5000
	253528520009	液压管总成(直)10-L2250-1SC-60°	Hydraulic hose assembly 10-L2250-1S	4	H=5500
	263030520017	液压管总成(直)10-L2390-1SC-60°	Hydraulic hose assembly 10-L2390-1S	4	H=6000
16	255029020024	接头(锁定弯)8-2xM16x1.5-60°	Joint (locking bend)8-2xM16x1.5-60°	2	
17	910200200059	螺钉GB70.1-M8x30-8.8	Screw GB70.1-M8x30-8.8	2	
18	910100100054	螺栓GB5782-M12x80-8.8	Bolt GB5782-M12x80-8.8	2	
19	910400200005	大垫圈GB96.1-12-200HV	WasherGB96.1-12-200HV	4	

255098501044 双附加管路（三级全自由）/(three stage full free)

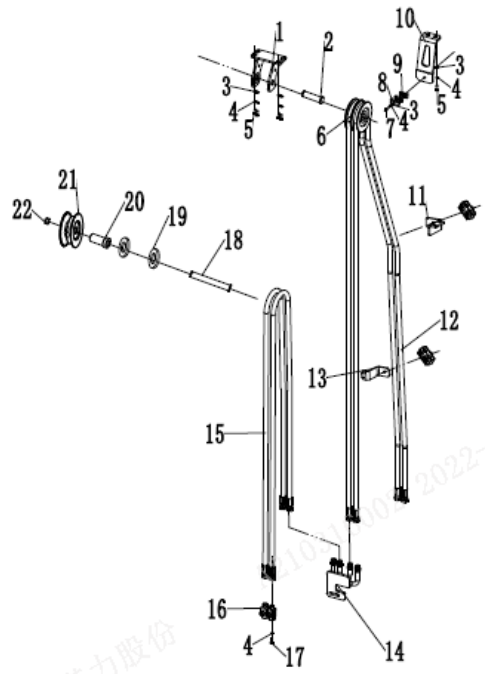

序号/NO	编码/SN	名称	Name	数量/QTY	备注/Remark
20	255030520022	衬套Φ22xΦ13x56	BushingΦ22xΦ13x56	1	
21	255030520021	滑轮Φ110x27(单槽)	Pulley Φ110x27	2	
22	910300100008	螺母GB6170-M12-10	Nut GB6170-M12-10	1	

255098501045 电器系统/ELECTRONIC

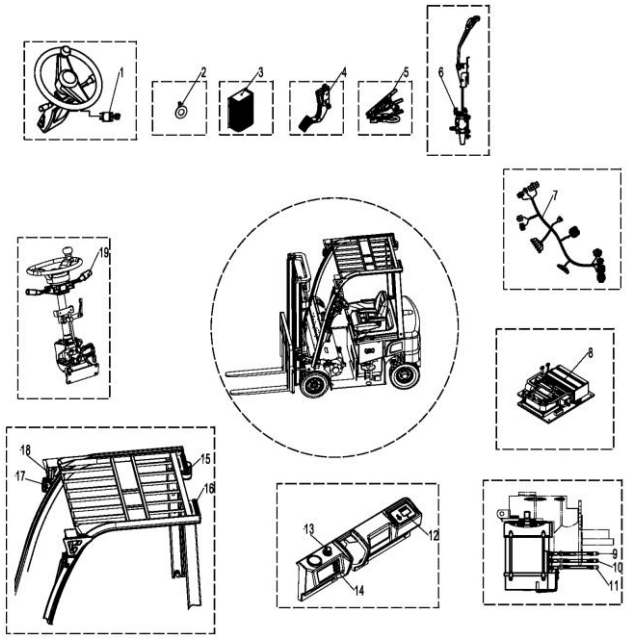

序号/NO	编码/SN	Name	名称	数量/QTY	备注/Remark
1	920200200002	Key switch	钥匙开	1	
2	920500100001	Horn 125-DC24V	喇叭125-DC24V	1	
3	272333510002	The converter is DC48V to 24V	转换器DCP48W300-24V	1	
4	921700100012	Accelerator MO126D1 (ORG)	加速器MO126D1(ORG)	1	
5	921700100015	Accelerator JCTH2-5L	加速器JCTH2-5L	1	
	921700100005	Accelerator FZ3-532-133	加速器FZ3-532-133	1	Curtis
6	920200300004	Micro switch RZ-15GQ22-B3	微动开关RZ-15GQ22-B3	3	
7	252133010001	Body wire harness (Inmotion-4P20Q-	车身线束(Inmotion-4P20Q-1)	1	Inmotion半交流
	252133010009	Body wire harness (Inmotion-4P20Q-	车身线束(Inmotion-4P20Q-2)	1	Inmotion全交流
	252133010015	Body wire harness (Curtis-4P20Q-1)	车身线束(Curtis-4P20Q-1)	1	Curtis半交流
	252133010016	Body wire harness (Curtis-4P20Q-2)	车身线束(Curtis-4P20Q-2)	1	Curtis全交流
	252133010103	Body wire harness (ACM-4P20Q)	车身线束(ACM系统-4P20Q)	1	ACM全交流
	252133010028	Body wire harness (Curtis-F-4P20Q)	车身线束(Curtis-F系列-4P20Q)	1	Curtis-F系列
8	252133010027	Electronic control components(Curt	电控组件(Curtis-F系列-4P20Q)	1	Curtis-F系列
	252133010102	Electronic control components(ACM-	电控组件(ACM系统-4P20Q)	1	ACN全交流
	252133010002	Electronic control components(Inmo	电控组件(Inmotion-4P20Q-1)	1	Inmotion半交流
	252133010008	Electronic control components(Inmo	电控组件(Inmotion-4P20Q-2)	1	Inmotion全交流
	252133010013	Electronic control components(Curt	电控组件(Curtis-4P20Q-1)	1	Curtis半交流
	252133010014	Electronic control components(Curt	电控组件(Curtis-4P20Q-2)	1	Curtis全交流
9	252133010005	Cable-U-35-8-8-2400	线缆-U-35-8-8-2400	1	
10	252133010006	Cable-U-35-8-8-2400	线缆-U-35-8-8-2400	1	
11	252133010007	Cable-U-35-8-8-2400	线缆-U-35-8-8-2400	1	
12	921100100045	Instrument IDD-E-35CD17B	仪表IDD-E-35CD17B	1	
13	920200100020	Emergency stop switch LAY39-01MJ-R	急停开关LAY39-01MJ-RC	1	
14	920200800020	Warped plate switch yb-nuoli-003	翘板开关YB-nuoli-003	1	
15	922000100050	Caution Light FLDJ-JSD-001	灯FLDJ-JSD-001	1	
	922000100051	Caution Light FLDJ-JSD-002	灯FLDJ-JSD-002	1	
16	922000100053	Grouped Lamps FLDJ-SSWD-003	灯FLDJ-SSWD-003	2	
17	922000100059	Wldth Lamp FLDJ-JSD-002	灯FLDJ-JSD-002	2	
18	922000100048	Head Lamp FLDD-4Z-002	灯FLDD-4Z-002	3	
19	920200800013	Combination switch JK361B-1003	组合开关JK361B-1003	1	

255098501045 电器系统/ELECTRONIC

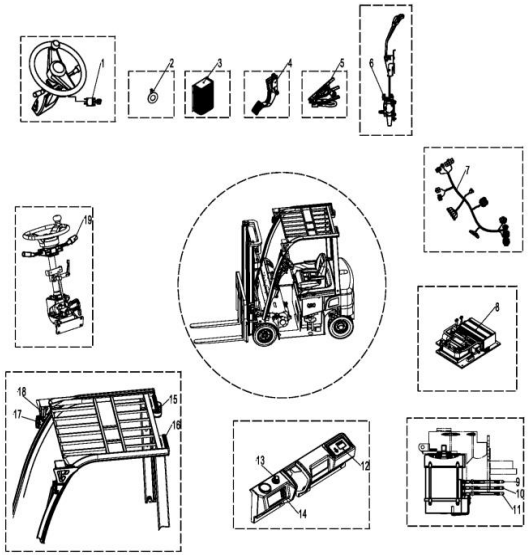

序号/NO	编码/SN	Name	名称	数量/QTY	备注/Remark
20	922000100049	Blue Lamp FLDJ-B2Z-001	灯FLDJ-B2Z-001	2	点状
	922000100054	Blue Lamp FLDJ-HGD-YZ	灯FLDJ-HGD-YZ		一字
	922000100057	Blue Lamp FLDD-LGD-YZ	灯FLDD-LGD-YZ		一字
	922000100061	Blue Lamp FLDJ-HGD-UX	灯FLDJ-HGD-UX		U型
	922000100062	Blue Lamp FLDJ-LGD-UX	灯FLDJ-LGD-UX		U型

255098501046 电控组件/ELECTRONIC COMPONENTS—Inmotion系统

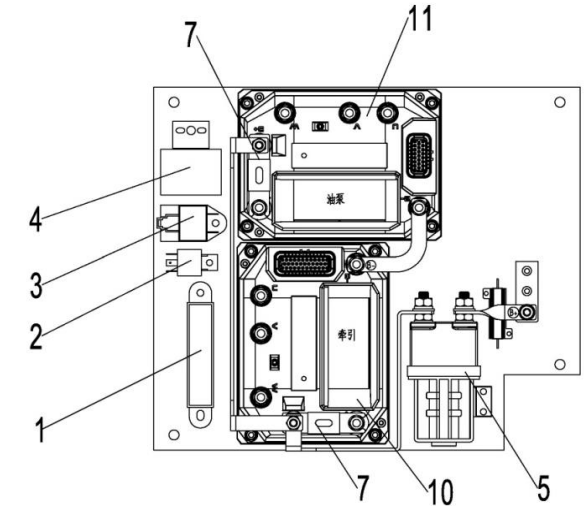

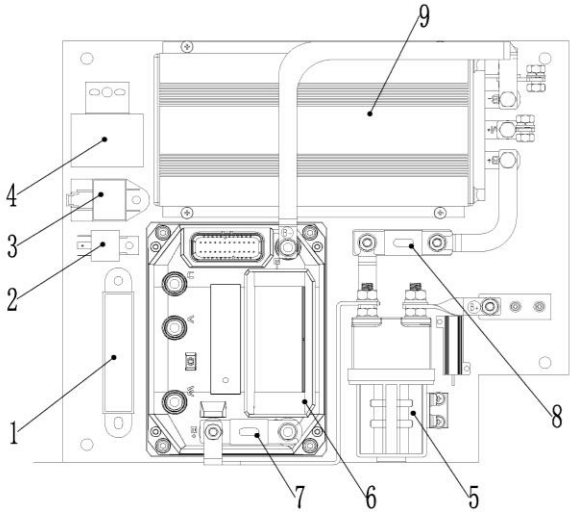

序号/NO	编码/SN	Name	名称	数量/QTY	备注/Remark
1	920100400008	Fuse box BX2081X	保险丝盒BX2081X	1	
2	920800100002	Relay DC24V-HFV4	继电器DC24V-HFV4	1	
3	922000100005	Lamp SG252-24V	灯SG252-24V	1	
4	920500100002	Horn buzzer DJB-24B	喇叭蜂鸣器DJB-24B	1	
5	920700100005	Contactor DC48C-SW200-262	接触器DC48C-SW200-262	1	
6	252198033001	Controller ACS48S-350C-35P(4P20Q-1	控制器ACS48S-350C-35P(4P20Q-1-T	1	半交流配置牵引
7	920100100013	Fuse 350A(plastic)	保险丝350A(塑料)	1	
8	920100100010	Fuse 250A(ceramic)	保险丝250A(陶瓷)	1	
9	252198033002	Controller HP500(4P20Q-1-P)	控制器HP500(4P20Q-1-P)	1	半交流配置泵
10	252198033003	Controller ACS48S-350C-35P(4P20Q-2	控制器ACS48S-350C-35P(4P20Q-2-T	1	全交流配置牵引
11	252198033004	Controller ACS48S-350C-23P(4P20Q-2	控制器ACS48S-350C-23P(4P20Q-2-P	1	全交流配置泵

255098501047 电控组件/ELECTRONIC COMPONENTS—Curtis系统

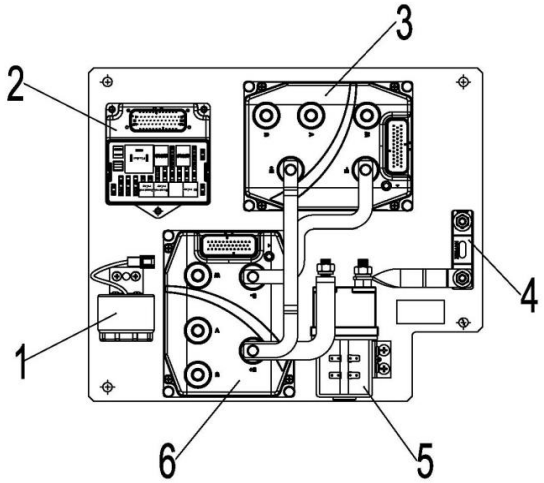

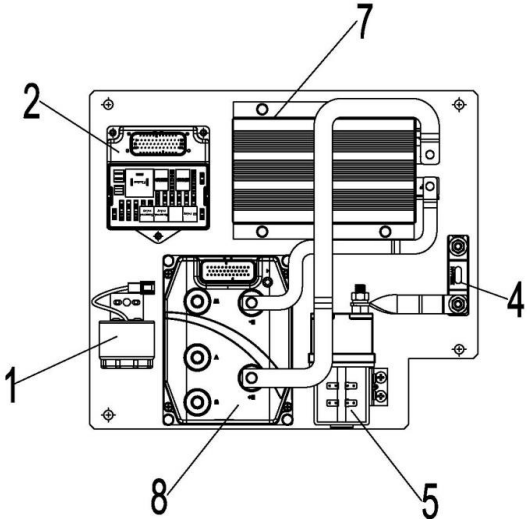

序号/NO	编码/SN	Name	名称	数量/QTY	备注/Remark
1	920500100002	Horn buzzer DJB-24B	喇叭蜂鸣器DJB-24B	1	
2	251233020001	Integrated electrical box	集成电器盒	1	
3	252198033008	Controller 1232SE-5321(4P20Q-2-P)	控制器1232SE-5321(4P20Q-2-P)	1	全交流配置泵
4	920100100014	Fuse 500A(ceramic)	保险丝500A(陶瓷)	1	
5	920700100005	Contactor DC48C-SW200-262	接触器DC48C-SW200-262	1	
6	252198033007	Controller 1232SE-5321(4P20Q-2-T)	控制器1232SE-5321(4P20Q-2-T)	1	全交流配置牵引
7	252198033006	Controller 1253-4804(4P20Q-1-P)	控制器1253-4804(4P20Q-1-P)	1	半交流配置泵
8	252198033005	Controller 1232SE-5321(4P20Q-1-T)	控制器1232SE-5321(4P20Q-1-T)	1	半交流配置牵引

255098501048 电控组件/ELECTRONIC COMPONENTS—Curtis-F系统

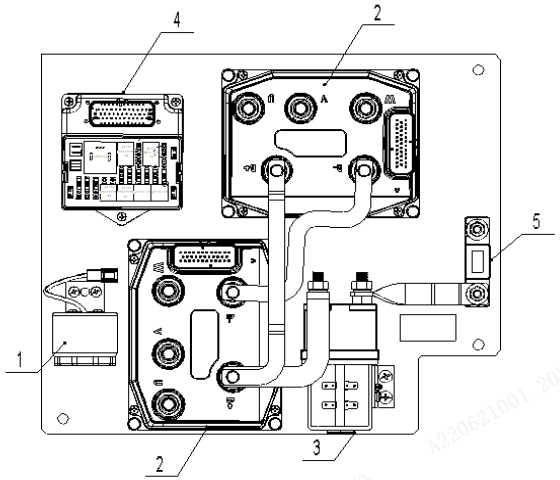

序号/NO	编码/SN	Name	名称	数量/QTY	备注/Remark
1	920500100002	Horn buzzer DJB-24B	喇叭蜂鸣器DJB-24B	1	
2	921400100156	Controller AC-F4-A-48-375-001	控制器AC-F4-A-48-375-001	1	牵引（Curtis-F）
	921400100156	Controller AC-F4-A-48-375-001	控制器AC-F4-A-48-375-001	1	泵（Curtis-F）
3	920700100005	Contactor DC48C-SW200-262	接触器DC48C-SW200-262	1	
4	251233020001	Integrated electrical box	集成电器盒	1	
5	920100100014	Fuse 500A(ceramic)	保险丝500A(陶瓷)	1	

255098501049 电控组件/ELECTRONIC COMPONENTS—ACM系统

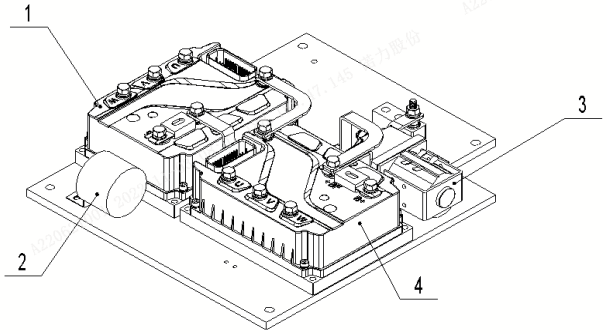

序号/NO	编码/SN	Name	名称	数量/QTY	备注/Remark
1	921400100145	Controller ACM48C350	控制器ACM48C350	1	牵引(ACM)
2	920700100005	Contactor DC48C-SW200-262	接触器DC48C-SW200-262	1	
3	920500100002	Horn buzzer DJB-24B	喇叭蜂鸣器DJB-24B	1	
4	921400100154	Controller ACM48C250	控制器ACM48C250	1	泵(ACM)

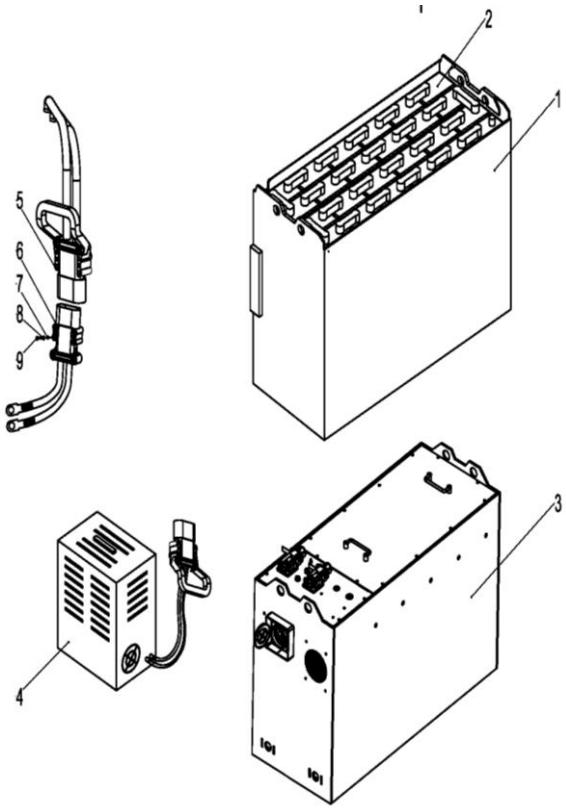

255098501050 畜电池/BATTERY

序号/NO	编码/SN	Name	名称	数量/QTY	备注/Remark
1	252137010001	Traction battery 48v-4Pzs460H(weld	牵引电池48V-4PzS460H(焊)	1	
	252137010002	Traction battery 48v-4Pzs460H(bolt	牵引电池48V-4PzS460H(螺)	1	
	252137010005	Traction battery 48v-4Pzs400(weld)	牵引电池48V-4PzS400(焊)	1	
	252137010006	Traction battery 48v-4Pzs400(bolt)	牵引电池48V-4PzS400(螺)	1	
	252137010009	Traction battery 48v-4Pzs360(weld)	牵引电池48V-4PzS360(焊)	1	
	252137010010	Traction battery 48v-4Pzs360(bolt)	牵引电池48V-4PzS360(螺)	1	
2	252198537001	Battery cell 48v-4Pzs460H(weld)	电池单体48V-4PzS460HAh	1	
	252198537003	Battery cell 48v-4Pzs460H(weld)	电池单体48V-4PzS460HAh	1	
	252198537005	Battery cell 48v-4Pzs400(weld)	电池单体48V-4PzS400Ah	1	
	252198537007	Battery cell 48v-4Pzs400(weld)	电池单体48V-4PzS400Ah	1	
	252198537009	Battery cell 48v-4Pzs360(weld)	电池单体48V-4PzS360Ah	1	
	252198537011	Battery cell 48v-4Pzs360(weld)	电池单体48V-4PzS360Ah	1	
3	252137012107	Lithium battery LFP48A-400R-H-GF1	锂电池LFP48A-400R-H-GF1	1	400Ah【带加热】
	252137012108	Lithium battery LFP48A-300R-H-GF1	锂电池LFP48A-300R-H-GF1	1	300Ah【带加热】
	252137012109	Lithium battery LFP48B-200R-H-GF1	锂电池LFP48B-200R-H-GF1	1	200Ah【带加热】
	252137012116	Lithium battery LFP48A-400R-GF1	锂电池LFP48A-400R-GF1	1	400Ah【5年】
	252137012111	Lithium battery LFP48A-300R-GF1	锂电池LFP48A-300R-GF1	1	300Ah【5年】
	252137012112	Lithium battery LFP48B-200R-GF1	锂电池LFP48B-200R-GF1	1	200Ah【5年】
	252137012117	Lithium battery LFP48A-554R-GF1	锂电池LFP48A-554R-GF1	1	554Ah【5年】
	252137012114	Lithium battery LFP48A-315R-GF1	锂电池LFP48A-315R-GF1	1	315Ah【3年】
	252137012115	Lithium battery LFP48B-210R-GF1	锂电池LFP48B-210R-GF1	1	210Ah【3年】
	252137013101	Lithium battery LFP48B-200R-H-GF2	锂电池LFP48B-200R-H-GF2	1	200Ah【加热国际版】
	252137013102	Lithium battery LFP48A-300R-H-GF2	锂电池LFP48A-300R-H-GF2	1	300Ah【加热国际版】
	252137013103	Lithium battery LFP48B-400R-H-GF2	锂电池LFP48B-400R-H-GF2	1	400Ah【加热国际版】
	252137013104	Lithium battery LFP48A-554R-H-GF2	锂电池LFP48A-554R-H-GF2	1	554Ah【加热国际版】
	252137013105	Lithium battery LFP48B-200R-GF2	锂电池LFP48B-200R-GF2	1	200Ah【国际版】
	252137013106	Lithium battery LFP48A-300R-GF2	锂电池LFP48A-300R-GF2	1	300Ah【国际版】
	252137013107	Lithium battery LFP48B-400R-GF2	锂电池LFP48B-400R-GF2	1	400Ah【国际版】
	252137013108	Lithium battery LFP48A-554R-GF2	锂电池LFP48A-554R-GF2	1	554Ah【国际版】
4	921000200273	Lead acid Charger DF48V55A(国内三	铅酸充电器DF48V55A(国内三相380V)	1	配铅酸电池
	921000200068	Lead acid Charger SN48V55A(三相38	铅酸充电器SN48V55A(三相380V-415	1	

255098501050 畜电池/BATTERY

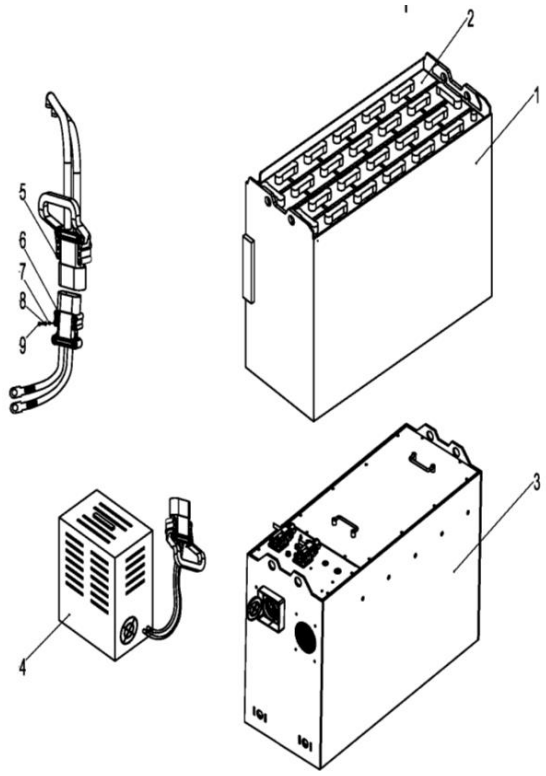

序号/NO	编码/SN	Name	名称	数量/QTY	备注/Remark
4	921000200071	Lead acid Charger SN48V55A(415V+AU	铅酸充电器SN48V55A(415V+澳式)	1	配铅酸电池
	921000200565	Lead acid Charger SN48V55A(220V+AM	铅酸充电器SN48V55A(220V+美式)	1	
	921000200072	Lead acid Charger SN48V55A(480V+AM	铅酸充电器SN48V55A(480V+美式)	1	
	921000200067	Lead acid Charger SN48V55A(国内三	铅酸充电器SN48V55A(国内三相380V)	1	
	252102036501	Li Charger ADY48V150A(three phase	锂电充电器ADY48V150A(国内三相380	1	配300Ah/400Ah
	252102036502	Li Charger ADY48V150A(3phase 380V	锂电充电器ADY48V150A(三相380V-4	1	配300Ah/400Ah
	252102036504	Li Charger ADY48V150A(240V+America	锂电充电器ADY48V150A(240V+美式)	1	配300Ah/400Ah
	252102036505	Li Charger ADY48V150A(480V+America	锂电充电器ADY48V150A(480V+美式)	1	配300Ah/400Ah
	252102036506	Li Charger ADY48V200A(three phase	锂电充电器ADY48V200A(国内三相380	1	配400Ah/554Ah
	252102036507	Li Charger ADY48V200A(3phase 380V	锂电充电器ADY48V200A(三相380V-4	1	配400Ah/554Ah
	252102036509	Li Charger ADY48V200A(240V+America	锂电充电器ADY48V200A(240V+美式)	1	配400Ah/554Ah
	252102036510	Li Charger ADY48V200A(480V+America	锂电充电器ADY48V200A(480V+美式)	1	配400Ah/554Ah
	252102036511	Li Charger ADY48V100A(three phase	锂电充电器ADY48V100A(国内三相380	1	配200Ah/300Ah
	252102036512	Li Charger ADY48V100A(3phase 380V	锂电充电器ADY48V100A(三相380V-4	1	配200Ah/300Ah
	252102036514	Li Charger ADY48V100A(240V+America	锂电充电器ADY48V100A(240V+美式)	1	配200Ah/300Ah
	252102036515	Li Charger ADY48V100A(480V+America	锂电充电器ADY48V100A(480V+美式)	1	配200Ah/300Ah
	252102036519	Li Charger SUPEREC48V70A(three pha	锂电充电器SUPEREC48V70A(国内三	1	配200Ah
	252102036520	Li Charger SUPEREC48V100A(three ph	锂电充电器SUPEREC48V100A(国内三	1	配200Ah/300Ah
	252102036526	Li Charger YiJiaTong48V200A(three	锂电充电器YiJiaTong48V200A(国内三	1	配400Ah/554Ah
	252102036527	Li Charger ADY48V25A(three phase 3	锂电充电器ADY48V25A(国内三相380V	1	
	252102036528	Li Charger ADY48V25A(110V+American	锂电充电器ADY48V25A(110V+美式)	1	
5	920400100021	Connectors REMA95043-39	接插件REMA95043-39	1	
6	920400100022	Connectors REMA95016-32	接插件REMA95016-32	1	
7	910200200046	Screw GB70.1 M6x60-8.8	螺钉GB70.1-M6x60-8.8	1	
8	910400100005	Washer GB97.1-6-200HV	平垫圈GB97.1-6-200HV	1	
9	910400500005	Spring washer GB93-6	弹簧垫圈GB93-6	1	