Item: T820050R
Capacity: 2 TON

2 TON HYDRAULIC TROLLEY JACK

FR **CRIC ROULEUR HYDRAULIQUE**

ES **GATO HIDRAULICO DE CARRETILLA**

DE **RANGIERWAGENHEBER**

RU **ДОМКРАТ ГИДРАВЛИЧЕСКИЙ ПОДКАТНОЙ**

OWNER'S MANUAL

Manual & trouble shooting
QR code

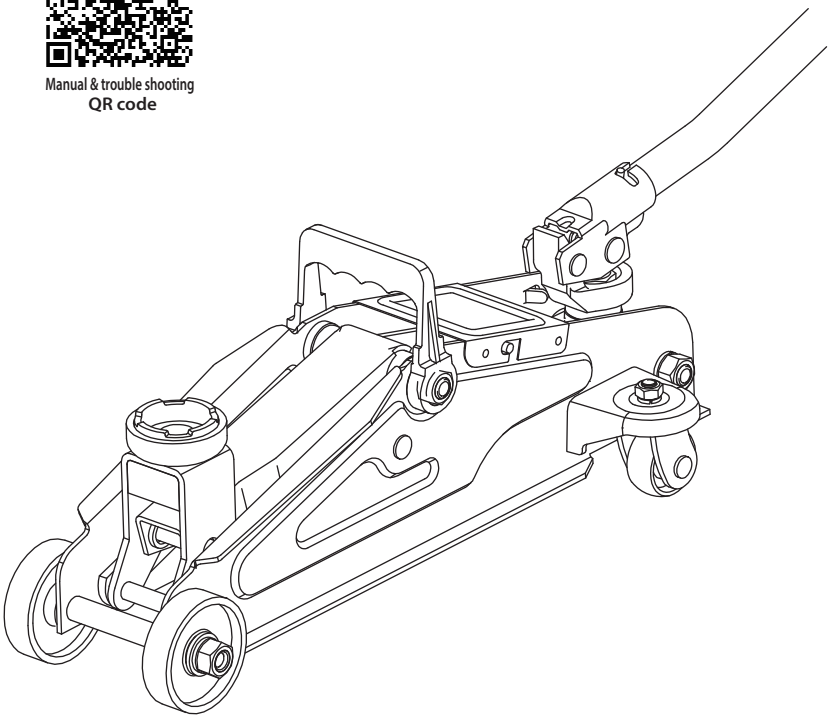

Please read these instructions carefully before using
the product for the first time and store them for future reference. This product must be operated in accordance with these instructions at all times. Make these instructions for use accessible to all persons who will be working with this product. This applies also when reselling the product.
We cannot assume any liability for any accidents or damage that may arise due to non-observance of this guide or the safety instructions contained therein. Any structural modifications to the product will void the manufacturer's warranty!

This product is intended for private use only!

Technical specifications

Description:	Hydraulic trolley jack
Model:	T820050R
Nominal load:	max. 2 tonnes
Lifting height:	min. 135 mm to max. 340 mm
Total length:	ca. 447 mm
Own weight:	ca. 8.7 kg

Made in China

Intended use / safety instructions

This product is a hydraulic trolley jack for lifting motor vehicles. It is intended for use as a lifting device only. Ensure that the load to be lifted does not exceed the maximum permissible load of the jack. The maximum load of 2 tonnes must not be exceeded otherwise the jack may become damaged and safety compromised. Use the jack on a firm, even surface only. Instability or slipping of the load may occur on soft or uneven surfaces. Consequential damage to the vehicle or persons cannot then be precluded. (Risk of accident!). Make sure there are no persons inside the vehicle being lifted. Position the hydraulic jack so that no part of your body will be under the vehicle while it is being lifted. Never work under a car that is being supported only by the hydraulic jack. Always use additional supports. Before lowering the hydraulic jack, ensure there are no persons or objects under the vehicle. Never leave the hydraulic jack unattended for longer periods when it is supporting a load as it can lose pressure and begin to sink for design-related reasons. Therefore place something underneath the lifted load immediately! Never get into the vehicle or start its engine while it is on the hydraulic jack.

WARNING: Lifting of persons prohibited!

General warning sign

Rated capacity: 2T

Read the manual instruction before using

Do not work under the vehicle when you are using the jack

Work under the vehicle with jack stands

Use the jack on even ground

Use wheel chocks to secure the wheel

Do not overload

Warning about hand injuries

General usage instructions

Before using the hydraulic jack, check for loss of oil, damage or missing accessories.

First time operation:

1. Open the drain valve (1) and insert the enclosed handle (extension) in the pumping arm (2). To ensure the oil distributes itself completely, carry out approx. 6 full pumps of the handle.
2. Close the drain valve - the vehicle jack is now ready for use.

Lifting the vehicle:

3. Locate your vehicle on an even, firm surface and secure the vehicle against rolling as specified by the vehicle manufacturer.
4. To ensure safe lifting, position the jack at a 90° angle to the vehicle and under the appropriate jacking point (see the manufacturer's instructions).
5. Insert the handle in the drain valve and close it by rotating clockwise until the limit stop is reached.
6. Insert the handle in the pumping arm and pump the handle until the saddle (3) is in contact with the vehicle.
7. Check again that the jack is seated correctly.
8. Continue pumping the handle until the vehicle has been lifted to the desired height. **Caution:** Observe the vehicle carefully during the lifting operation. The jack should move in the direction of the vehicle during lifting. Should this not be the case, there is a strong possibility that the vehicle will slide off the jack.
9. Put the handle out of the pumping arm. (Risk of accident!)
10. Secure the load with suitable jack stands before commencing work on or under the vehicle. **Caution:** Working on or under the vehicle without first appropriately securing the raised load is prohibited! (Risk of accident!)
11. After you have finished working on the vehicle, open the drain valve by carefully twisting the jack handle in small increments in a counterclockwise direction until the vehicle begins to move downwards.
12. Once the vehicle is firmly on the ground, the drain valve can be opened again (approx, one half turn) in order to return the lifting arm (4) all the way to the bottom in the starting position.
13. Before lifting the load, check that the drain valve is properly closed.
14. All moving parts must be lubricated in accordance with the operators' manual and maintained on a regular basis.

Storage & care:

15. When the vehicle jack is not in use, the lifting arm should be in the lowest position and the handle in an upright position to protect the precision mechanics from damage. The vehicle jack must be stored in a horizontal position and in a dry location. Ensure the jack remains in its original condition. Do not undertake any modifications to the device.
16. Use only SAE10 (SAE: Society of Automotive Engineers) grade, special-purpose hydraulic oil for the pump. Dispose of all used and spilled oil appropriately.
17. Do not use a high pressure cleaner to clean the jack. All external moving parts, e.g. the foot roller bearings (5), fastening bolts of the lifting arm (6), fastening bolts of the lifting arm cylinder (7) and fastening bolts of the pumping arm (8) must be well lubricated regularly every 3 months. **IMPORTANT:** Never lubricate or grease the rods of the pump (9) and lifting cylinder (10).
18. All maintenance and repair work must be performed by a suitably qualified personnel an in accordance with the manufacturer's instructions.
19. **Caution:** Do not use the jack if there are any missing, loose or broken parts!

NOTE: The instructions below must not be carried out while the vehicle jack is In use.
NOTE: The vehicle jack is equipped with a safety valve (15). It has been configured to allow the vehicle jack to lift loads up to 2 tonnes. The safety valve must not be modified or adjusted in any way!

Troubleshooting

Problem 1: The lifting arm won‘t raise when pumping under load.

- Check whether the drain valve is fully closed. Close it by rotating the handle clockwise.
- Check the oil level by placing the vehicle jack in a horizontal position.
- Not enough oil. Top up the hydraulic oil and purge the hydraulic system - see also the “Topping up the hydraulic oil” and “Purging" sections.

Problem 2: The lifting arm is sinking under load.

- Follow the instructions provided for “Problem 1”. Should this still not eliminate the fault, the vehicle jack needs to be repaired by an authorized repairer.

Problem 3: The lifting arm can't be lowered.

- The tension spring for the lifting arm has unhooked or broken. Rehook the spring or replace the broken spring by an equivalent new spring.
- The vehicle jack presumably needs lubricating. All moving parts must be cleaned and lubricated or greased, (see “Instructions for use"; item 17). **IMPORTANT:** The rods of the pumping and lifting cylinder should **never** be lubricated or greased.
- Too much oil in the hydraulic system. Screw out the drain valve and drain out the excess oil - see also the “Topping up the hydraulic oil" and “Purging” sections.

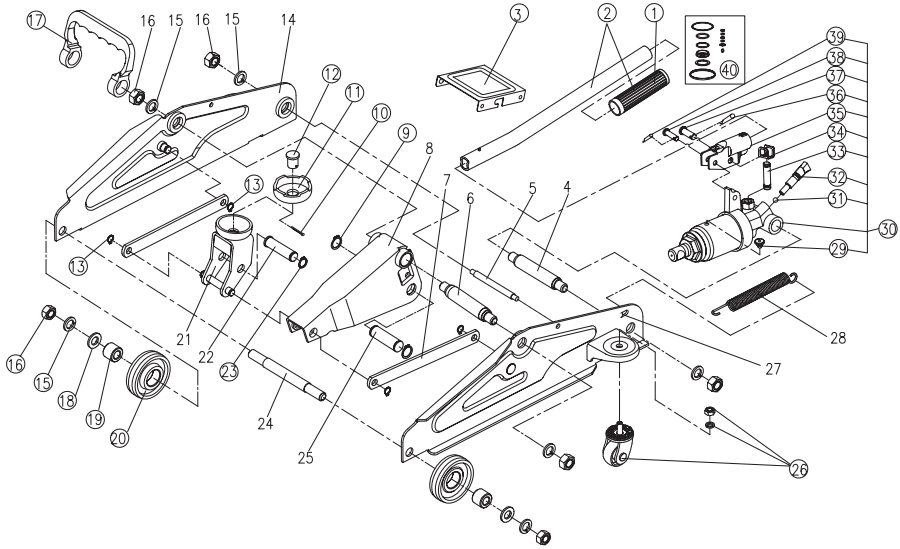

REF.	PART	DESORIPTION	QTY
1	QLQD2A.1-1	Handle cover	1
2	T820033.1(asm)	Handle	1
3	T820050-1	Cover plate	1
4		Supporting shaft	1
5		Pin for frame	1
6		Supporting shaft	1
7		Connecting rod	2
8		Lifting arm assembly	1
9	GB894.1-16	C-clip Ø 16mm	2
10	GB91-2X20	Cotter pin Ø 2x20mm	1
11	T82000Y.3-1	Saddle	1
12	QLQD2C.5-2a	Saddle Pin	1
13	GB894.1-10	C-clip Ø 10mm	4
14		Right frame assembly	1
15		Spring Washer M12	6
16	GB6170-M12	Nut M12	6
17		Handle	1
18	GB97.1-12	Washer M12	2
19	T820013-7	Sleeve for front wheel	2
20	T820013D-2	Front wheel	2

REF.	PART	DESORIPTION	QTY
21		Saddle base assembly	1
22		Pin for saddle base	1
23	GB894.1-13	C-clip Ø 13mm	1
24		Shaft for front wheel	1
25		Pin for lifting arm	1
26	T820033XE.2(asm)	Rear caster assembly	2
27		Left frame assembly	1
28		Return spring	1
29	TF1201C-29	Oil plug	1
30	T820050.1	Power unit assembly	1
31	GB308-6	Steel ball bearing Ø 6mm	1
32	T83003.2-10(asm)	Release value assembly	1
33	QLQD2A.2-5(asm)	Pump plunger assembly	1
34	QLQD2A.2-7b	U-Bracket for plunger	1
35	T820050.1-2	Handle socket	1
36	QLQD2B-3	Roundwire snap ring Ø 1.4x26mm	1
37	QLQD2A.2-19	Pin for pump plunger	1
38	QLQD2A.2-20	Pin for unit base	1
39	QLQD2B.2-5	Roundwire snap ring Ø 1.2x20mm	1
40	T820050.MF	Seal kit	1