Product Description:Chain Saw
Model Number:CS1610E
Body Number:0640022002_S
Version: A
Issue Date: 2021/8/27

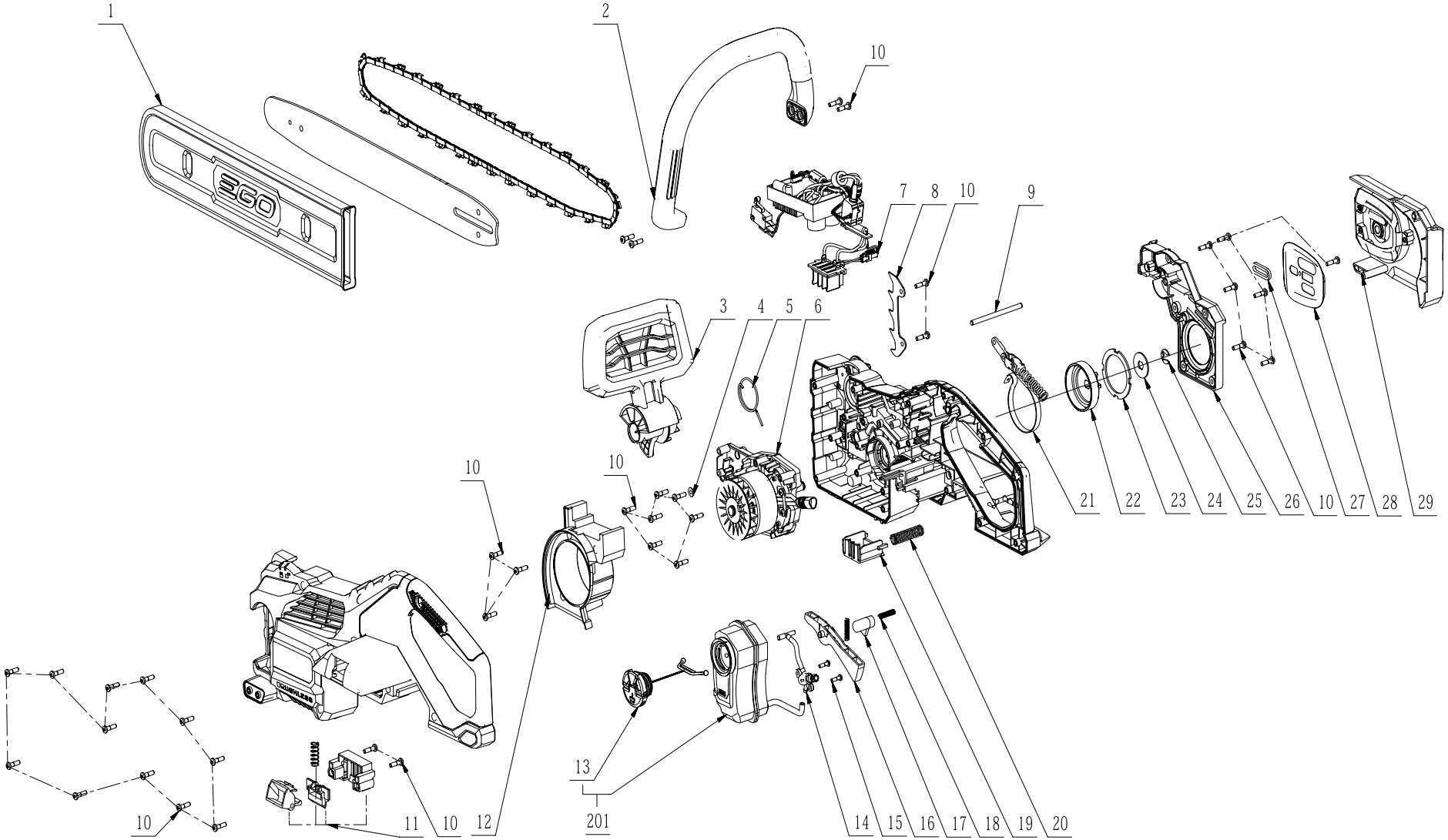

Repair Parts_Chain Saw_4564(CS1610E)

Index No.	Art. No.	Description	QTY in machine	Weight (g)	Size LxWxH (mm)	MPQ	Repairable or Not?	Standard Repair Time (min.)
1	3128201001	Sheath	1	140	406x94x20	1	Y	0.5
2	3127504002	Front Handle	1	110	225.3x201.7x129.6	1	Y	1
3	3403332001	Brake Handle	1	225	170×157×67	1	Y	2
4	3700182001	Washer B	1	0.5	4.3x10x0.5	10	Y	2
5	3660755001	Torsion Spring	1	4	37.5x37.5x4.2	1	Y	2
6	2828589002	Motor Unit	1	830	145×115×96	1	Y	7
7	2831128001	Electric Assembly	1	260	150×60×60	1	Y	4
8	3707012001	Wood Teeth	1	15	93x33x1.5	1	Y	3
9	5670526001	Parallel Pin	1	12	5x5x80	1	Y	2
10	5620479001	Screw	37	4	7×7×18	10	Y	0.5
11	2826940001	Button Unit	1	31	42.5x25x10.5	1	Y	2
12	3130231001	Fan Baffle	1	65	130x116x60	1	Y	2
13	2828587001	Kettle Cover Assembly	1	31	42.5x25x10.5	10	Y	1
14	2828601002	Pump Assembly	1	11	73×51×29	1	Y	8
15	5610305001	Tapping Screw	2	3	3.5×3.5×13	10	Y	8
16	3130334001	Switch Trigger	1	14	110x26x21	1	Y	2
17	3130335001	Lock off Button	1	3.3	27x20x12	1	Y	2
18	3660427002	Spring	2	0.5	5.5×5.5×24	10	Y	2
19	3131427001	Sliding Block	1	9.7	42×41×20	1	Y	2
20	3660979001	Compression Spring	1	3	11×11×43	10	Y	2
21	2826922001	Brake Assembly	1	52	115x70x15	1	Y	2
22	3422529001	Sprocket	1	85	53×53×24	1	Y	2
23	5690440001	Felt Ring	1	2	54.4x54.5x2	10	Y	2
24	5660208002	Gasket	1	6.3	10x28x1.5	10	Y	2
25	5660242001	"E" Ring	1	0.3	16x16x1	10	Y	1
26	3132734001	Brake Cover Plate	1	57.5	153×129×34	1	Y	2
27	3130337001	Rubber Gasket	1	1	34x12x4	1	Y	1
28	3706992001	Protecting Cover	1	16	85x76x6	1	Y	1
29	2828582002	Cover Assembly	1	183	105×107×40	1	Y	1
201	2828586002	Kettle Assembly	1	83.5	105×95×80	1	Y	8