Product Description:Leaf Blower
Model Number:LB6000E
Body Number:0880017001_S
Version: B
Issue Date: 2017/12/10

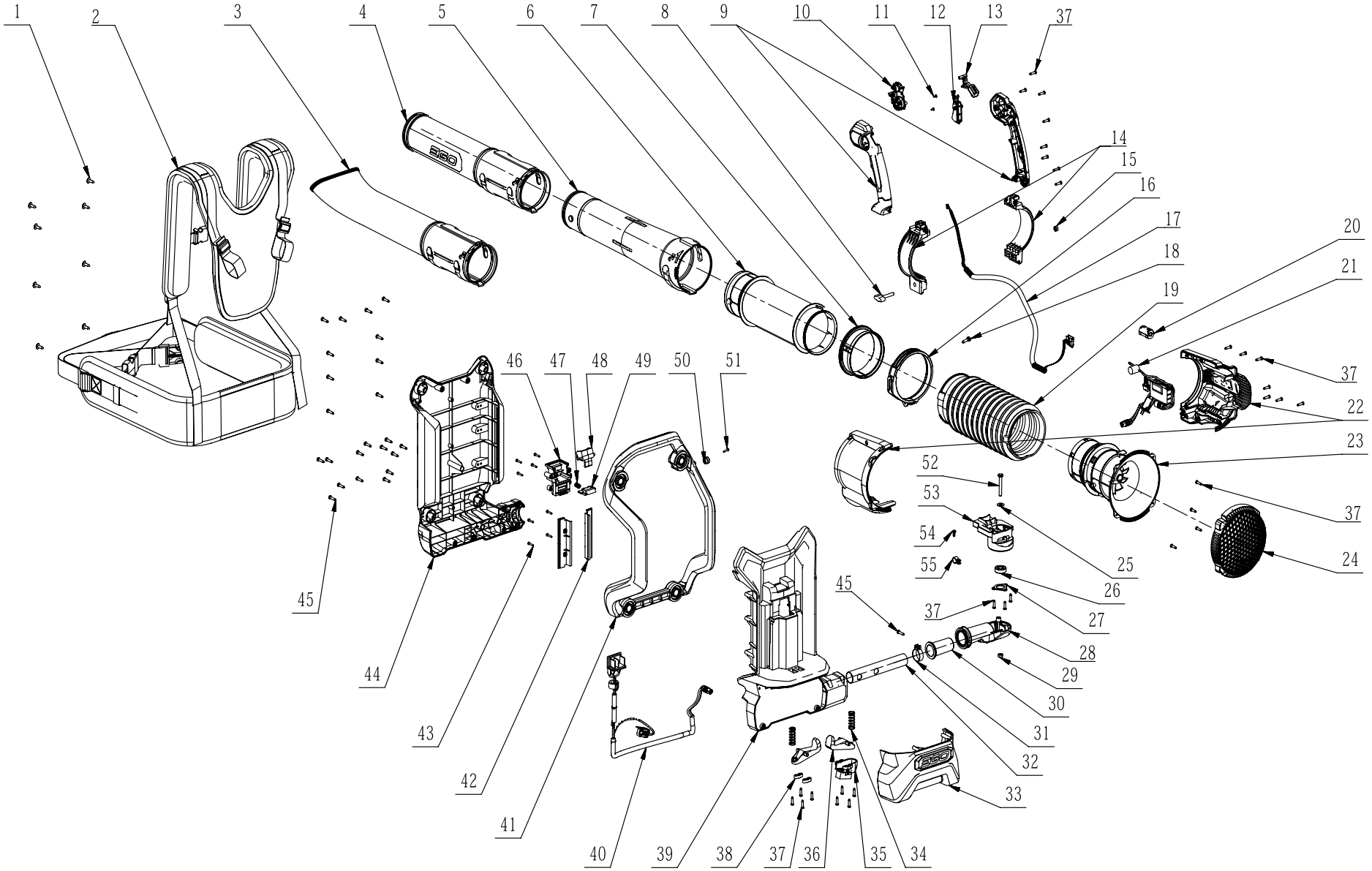

Repair Parts_600CFM Backpack Blower_4705.1(LB6000E B)

Index No.	Art. No.	Description	QTY in machine	Weight (g)	Size LxWxH (mm)	MPQ	Repairable or Not?	Standard Repair Time (min.)
1	5610298001	Tapping Screw	8	2.95	ST4.8x16	10	Y	1
2	3800121001	Harness	1	762.04	550x176x61	1	Y	2
3	3129248001	Blower Tube	1	330.26	ϕ94x535	1	Y	1
4	3129229001	Front Tube	1	232.57	ϕ84x440	1	Y	1
5	3129228001	Tube	1	234.44	ϕ105x440	1	Y	2
6	3128345002	Connecting Tube	1	249.34	ϕ109x297	1	Y	5
7	3128528001	Holding Ring	1	38.1	ϕ111x36.5	1	Y	3
8	5640239001	Wing Bolt	1	12.25	48x28x12	10	Y	1
9	3900013001	Handle Set	1	157.27	204x130.5x48	1	Y	15
10	2830309001	Electric Assembly	1	29.12	57x48x40	1	Y	10
11	5620176002	Screw With Washer	2	0.28	ST2.2x6.5	10	Y	1
12	3129247001	Trigger	1	8.08	60x23x21	1	Y	3
13	3129246001	Boost Button	1	5.62	26x59x15	1	Y	3
14	3900016001	Handle Support	1	103.58	164.5x43.4x107	1	Y	15
15	5630009002	Hexagon Nut	1	2.27	M6	10	Y	1
16	3128545001	Lock Ring	1	35.83	ϕ124x20.2	10	Y	1
17	4860515001	Internal Wire ASSY	1	27.71	40x50x48	1	Y	10
18	5610224002	Hexagon Lobuar Screw	1	3.18	ST4.8x23	10	Y	1
19	3128519001	Bellows Seal	1	280.51	ϕ127.8x263	1	Y	5
20	3680227001	Magnetic Block	1	20	ϕ20x33	1	Y	10
21	2830308001	Electric Assembly	1	127.94	67x85x32	1	Y	10
22	2824817001	L R Housing Set	1	263.02	168.4x135x155	1	Y	10
23	2825848001	Ducted Set	1	621.21	ϕ224x148	1	Y	15
24	3128343001	Fan Baffle	1	67.59	ϕ161x37	1	Y	5
25	5650419002	Plain Washer	1	1.36	ϕ16x1	10	Y	1
26	5700048003	Ball Bearing	1	18.6	ϕ26x8	1	Y	15
27	3706109001	Bearing Retainer	1	6.8	ϕ43.5x2	1	Y	15
28	3421815001	Connecting Lever	1	90.72	141.5x59.5x52	1	Y	15
29	5630015001	Prevailing Torque Hexagon Nut	1	2.72	M6	10	Y	1
30	3128346001	Plastic Sleeve	1	10.89	ϕ37.2x56.2	1	Y	15
31	3705178001	Fixed Ring	1	7.71	35.7xϕ28.3x10	10	Y	15
32	3706049001	Connecting Tube	1	34.47	ϕ25x164	1	Y	15
33	3322077001	Decorative Cover	1	62.6	210x118.7x86.7	1	Y	15
34	3660306002	Spring	2	3.63	ϕ19.6x38.5	10	Y	15
35	3129227001	Switch Box	1	12.89	40x54x37	1	Y	15
36	3126773001	Lever	2	16.78	79.9x38.8x29	1	Y	15
37	5610294001	Tapping Screw	30	0.91	ST4x16	10	Y	1
38	3122798001	Cord Anchorage	2	0.91	23.2x8.1x7	1	Y	15
39	3128358001	Front Housing	1	702.16	400.9x301.2x138	1	Y	20
40	2825709001	Joint Assembly	1	62.6	100x100x10	1	Y	15
41	3128357001	Frame	1	482.62	395.5x279.6x128.4	1	Y	6
42	3128361001	Cover	2	9.98	113.2x25x19.6	1	Y	15
43	5610274001	Self Tapping Screw	8	0.45	ST2.9x16	10	Y	1
44	3128362001	Rear Housing	1	728.92	400.9x301.2x76.8	1	Y	3
45	5620157006	Hexagon Socket Screw	24	1.91	ST4.2X19-F	10	Y	1
46	3128359001	Support	1	1.95	61.4x65.8x42	1	Y	15
47	3660013003	Spring1	1	0.45	ϕ9.8x25.6	10	Y	1
48	3127498001	Power Pack Button	1	5.9	36.8x43x27.5	1	Y	20
49	3127497001	Power Pack Button	1	9.57	36x43x26	1	Y	20
50	3128883001	Sleeve	1	0.91	14x14x10.2	10	Y	1
51	5620410003	Screw With Washer	1	0.45	2.9x13	10	Y	1
52	5640243001	Hexagon Head Bolt	1	9.98	M6x45	10	Y	15
53	3128521001	Support	1	56.7	99x72x50.2	1	Y	15
54	5610097002	Thread Forming Screw	1	1.36	M4x10	10	Y	1
55	3705237001	Hoop	1	5.9	21.7xϕ11x8	1	Y	15