Print Number: Print Date:

NOBLELIFT

Scan QR Code for More

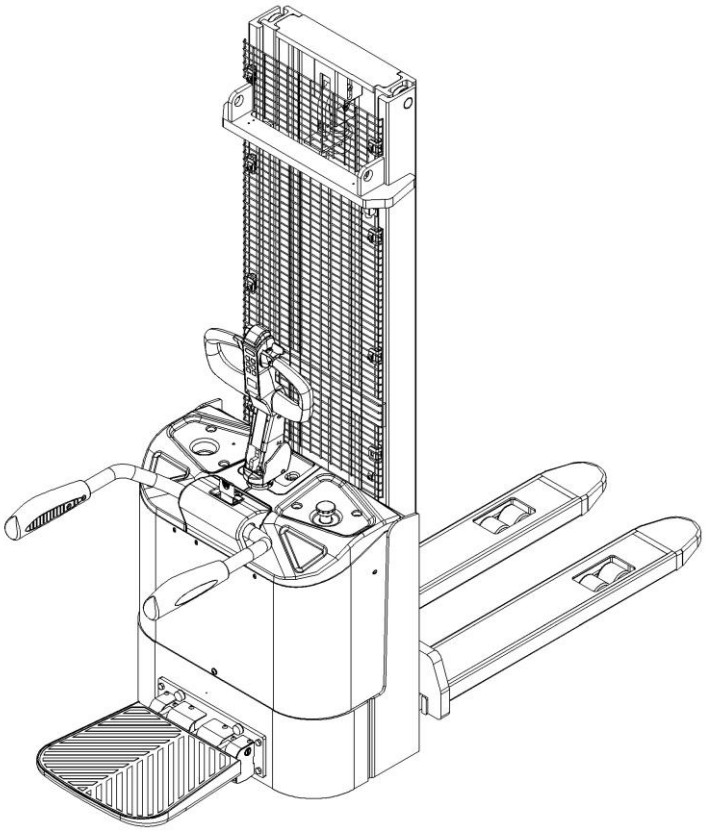

Electric Pallet Stacker PSE15-C

PARTS MANUAL

537246020101

Version：V01

Truck Identification Number From:

PSE15-C-PM01EN

Please order parts from authorized dealers of Noblelift Intelligent Equipment Co., LTD.

In order to avoid wrong delivery, all the orders for spare parts should specify the following items:

- Truck model, identification number and manufacture year.
- Orders for spare parts of mast, hydraulic transmission unit, steering axle, motor, etc. shall indicate the manufacture number of these parts.
- Codes for Noblelift spare parts are shown in the table of parts manual. Please also pay attention to the description of supply status, order quantity, etc. (check the number listed in "Mark" column of the parts manual).

"Mark" Column:

The unmarked indicates the parts are in short supply cycle.

Number 1: supply as package. Indicating these that parts are small parts and seal parts, which are supplied in package unit and in short supply cycle.

Number 2: supply with constraints. Indicating that these spare parts are not in stock and will be prepared for production after receiving the order from customers, which are in long supply cycle.

Number 3: phasing-out supply. Indicating that these parts will be replaced by new parts due to technical improvements and the current stock will not be available when these parts run out. Please check the description of technical improvements notice.

Number 4: supply as assembly. Indicating that these parts are assembly parts defined by manufacture process, which cannot be supplied as a single part.

Number 5: check other tables.

This parts manual is the property of Noblelift and can be shared under the confidential agreement only, Noblelift has the right to claim for compensation of any unauthorized use. Copy without permission is not allowed. Figures in the manual are not limited by the original design. Noblelift Intelligent Equipment Co., LTD reserves the right to improve the products for continuous technology progress.

Table of Contents

Chapter 1: Drive System....4
01 Drive Unit (537246013501)....4
02 Drive Assembly (537046013502)....6
Chapter 2: Hydraulic System....8
01 Hydraulic Assembly (537246024001)....8
01 Hydraulic Assembly (537246024001) Continuation....10
02 Hydraulic Unit (532246023501)....12
Chapter 3: Truck Frame....14
01 Fork Carriage (531846038001)....14
02 Chassis (Two Stage Mast) (537246021501)....16
02 Chassis (Two Stage Mast) (537246021501) Continuation....18
03 Chassis (Single Stage Mast) (537246021502)....20
03 Chassis (Single Stage Mast) (537246021502) Continuation....22
Chapter 4: Steering System, Braking System, Wheels....24
01 Tiller Unit (537246011001)....24
02 Control Handle (537246011002)....26
03 Steering Unit (537246031201)....28
04 Load Wheel (532646017001)....30
05 Caster (532246016501)....32
Chapter 5: Electrical Parts....34
Chapter 6: Guard Arm, Platform....38
01 Guard Arm (537246017501)....38
02 Platform (537246018001)....40
Chapter 7: Special Parts....42
01 Load Backrest (Optional) (532646040501)....42
Chapter 8: Others....44
01 Labels and Decals-EU (537246047001)....44
02 Labels and Decals-US (537246047002)....46
Appendix....48
01 Electrical Circuit Diagram (537246045501)....48
02 Hydraulic Circuit Diagram (537046045504)....49
03 Consumable Parts List....50

Chapter 1: Drive System

01 Drive Unit (537246013501)

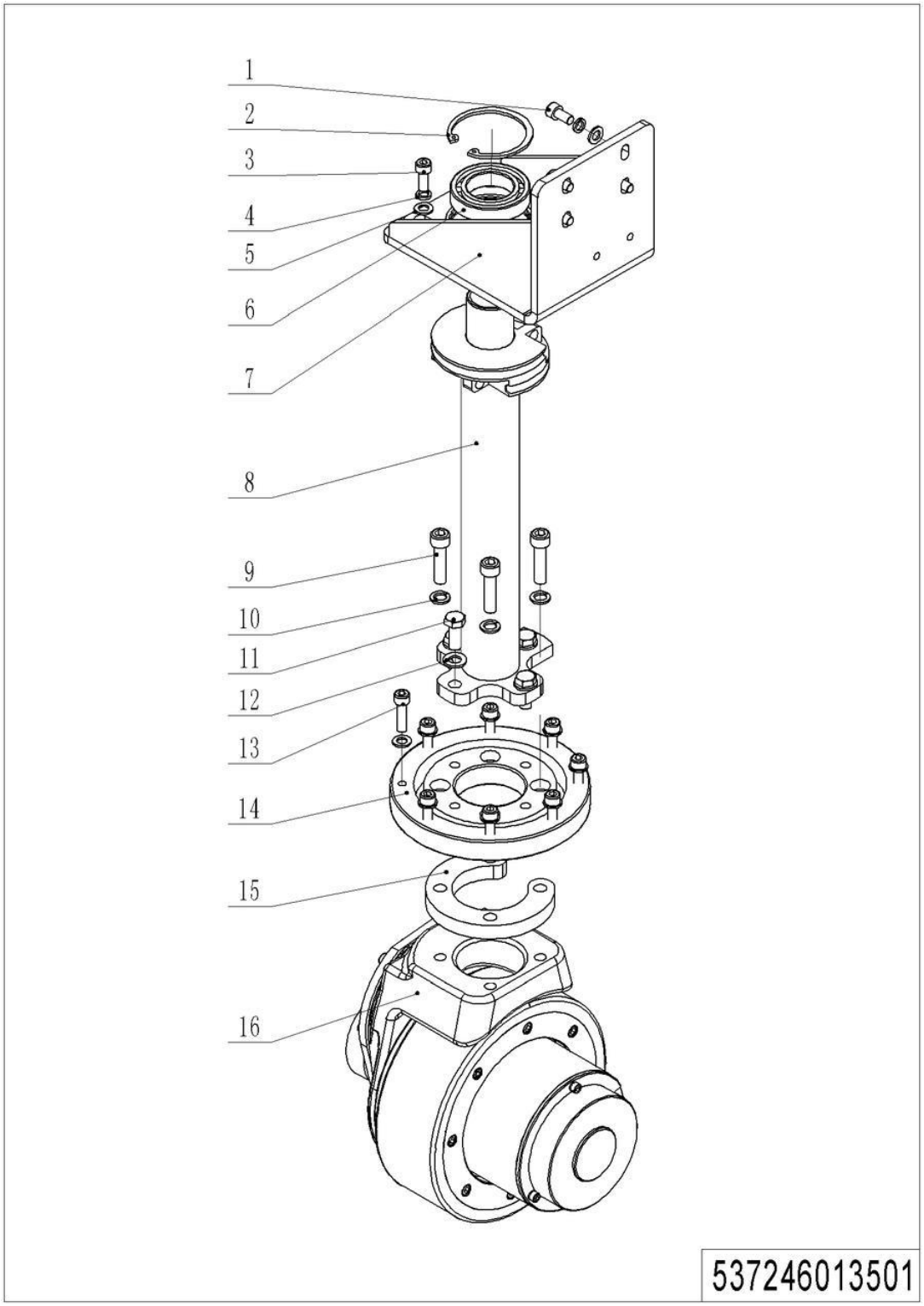

1= Supply as package. 2= Supply with constraints. 3= Phasing-out supply. 4= Supply as assembly. 5= Check other tables.

01 Drive Unit (537046013501)

No.	Item Code	Mark	Item Description	Qty.	Substitute	Note
1	910200200055	1	Screw	4		
2	910401400019	1	Circlip	1		
3	910200200057	1	Screw	4		
4	910400500006	1	Spring Washer	8		
5	910400100006	1	Flat Washer	16		
6	910700200008	1	Bearing	1		
7	537231210002	2	Bracket	1		
8	537231210004	2	Shaft Welding	1		
9	910200200079	1	Screw	4		
10	910400500007	1	Spring Washer	4		
11	910100300036	1	Bolt	4		
12	910400100007	1	Flat Washer	4		
13	910200200138	1	Screw	8		
14	532213520001	2	Slewing Bearing	1		
15	531813520005	2	Plate	1		
16	961000700000	2	Drive Unit	1		DC-0.75KW

02 Drive Assembly (537046013502)

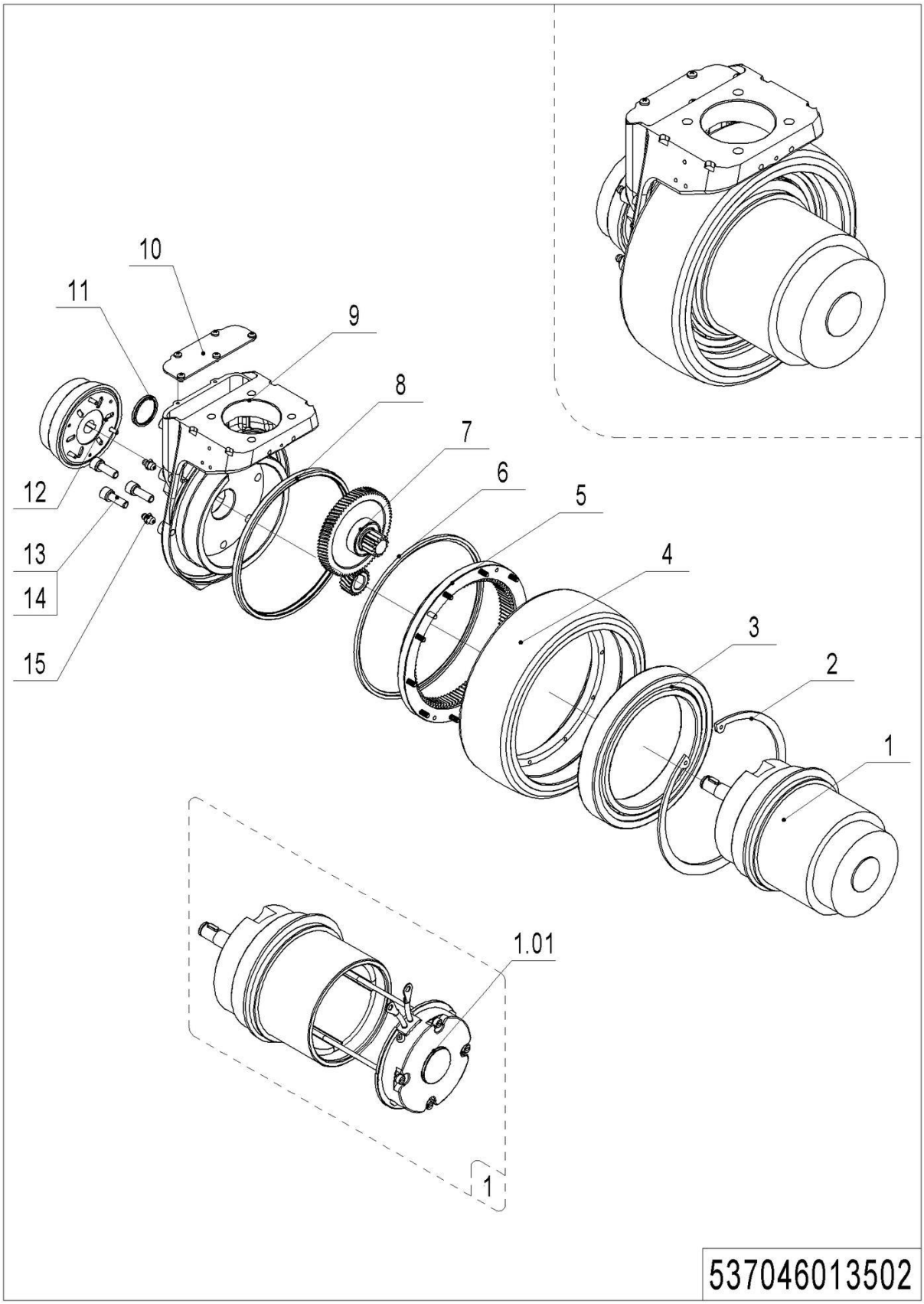

1= Supply as package. 2= Supply with constraints. 3= Phasing-out supply. 4= Supply as assembly. 5= Check other tables.

02 Drive Assembly (537046013502)

No.	Item Code	Mark	Item Description	Qty.	Substitute	Note
--	961000800000	2	Drive Unit	1		
1	537098510011	2	Motor	1		
1.01	537098510015	2	Carbon Brush	1		
2	910401400015	1	Circlip	1		
3	910700200053		Bearing	1		
4	961000700008	2	Tyre	1		
5	961000700007	2	Gear	1		
6	961000700009	1	Wiper Seal	1		
7	537098510012	2	Gear Components	1		
8	961000700013	1	Oil Seal	1		
9	537098510013	2	Gearbox	1		
10	537098510014	2	Close PlateAssembly	1		
11	961000700005	2	Cover	1		
12	961000700011	2	Brake	1		
13	910200200147	1	Screw	5		
14	910400500019	1	Spring Washer	5		
15	911200100003	1	Oil Cup	2		

Chapter 2: Hydraulic System

01 Hydraulic Assembly (537246024001)

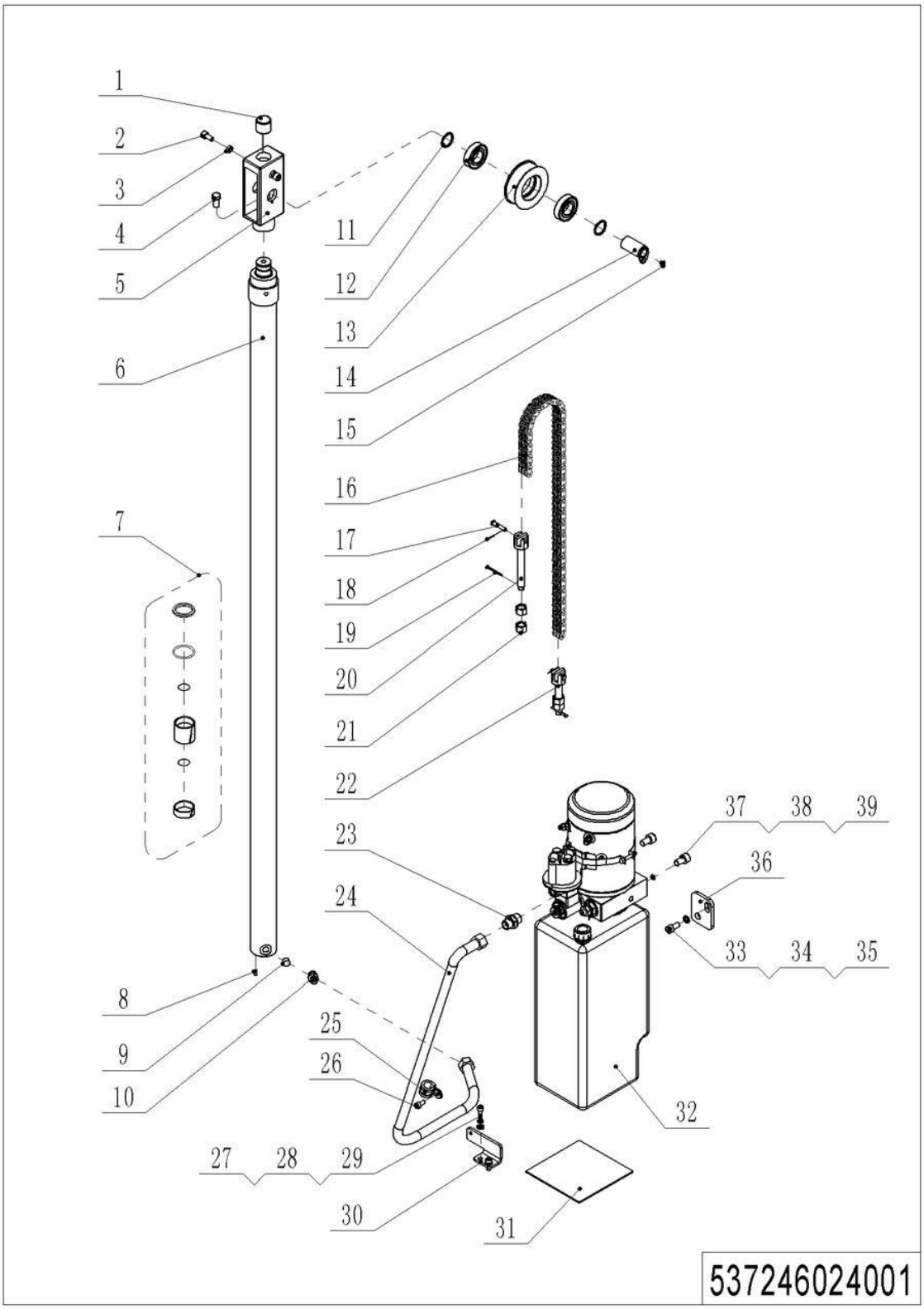

01 Hydraulic Assembly (537246024001)

No.	Item Code	Mark	Item Description	Qty.	Substitute	Note
1	532644020094	2	Crash Pad	1		
2	910200200075	1	Screw	2		
3	910300300005	1	Nut	2		
4	910100300049	1	Bolt	1		
5	531821520028	2	Yoke	1		
6	531821510015	2	Cylinder	1		Lift Height 1600
6	531821510016	2	Cylinder	1		Lift Height 2000
6	532644010031	2	Cylinder	1		Lift Height 2900
6	532644010037	2	Cylinder	1		Lift Height 3200
6	532644010041	2	Cylinder	1		Lift Height 3600
7	532698510001	2	Seal Kit	1		
8	950600300001	2	Safety Valve	1		
9	950400400003	2	Joint	1		
10	910600400020	1	Spring Pin	1		
11	910700200021	1	Bearing	2		
12	940200400003	2	Sprocket	1		
13	940600500008	2	Washer	2		
14	532644010035	2	Pin	1		
15	910200400014	1	Screw	1		
16	532644010083	2	Chain	1		Lift Height 2900
16	532644010084	2	Chain	1		Lift Height 3200
16	532644010085	2	Chain	1		Lift Height 3600
16	532643510087	2	Chain	1		Lift Height 1600
16	531821510014	2	Chain	1		Lift Height 2000
17	941100800008	1	Pin	2		
18	910600600015	1	Cotter Pin	2		
19	910600600037	1	Cotter Pin	2		
20	532643520137	2	Chain Anchor	1		
21	910300200008	1	Nut	4		
22	532643520137	2	Chain Anchor	1		Lift Height 2000

1= Supply as package. 2= Supply with constraints. 3= Phasing-out supply. 4= Supply as assembly. 5= Check other tables.

01 Hydraulic Assembly (537246024001) Continuation

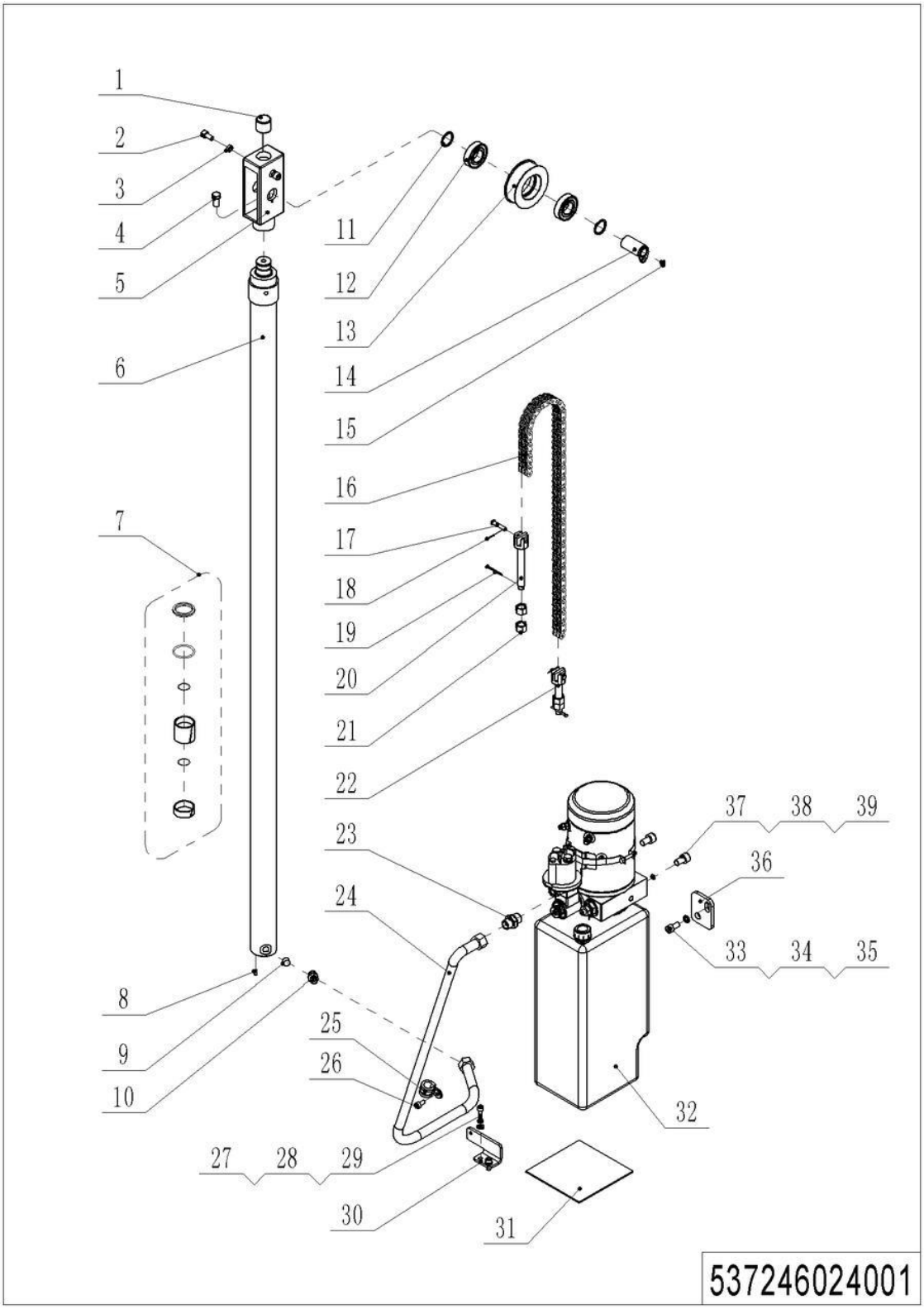

01 Hydraulic Assembly (537246024001) Continuation

No.	Item Code	Mark	Item Description	Qty.	Substitute	Note
22	532644020096	2	Chain Anchor	1		Optional for Other Models
23	950400300007	2	Joint	1		
24	537224020000	2	Hose	1		
25	951000100003	2	Hose Clamp	1		
26	910200200033	1	Screw	1		
27	910200200035	1	Screw	2		
28	910400500005	1	Spring Washer	2		
29	910400100005	1	Flat Washer	2		
30	537224020001	2	Fixing Base	1		
31	532223520002	2	Crash Pad	1		
32	----------	5	泵站	1		Check 532246023501
33	910200200055	1	Screw	2		
34	910400500006	1	Spring Washer	2		
35	910400100006	1	Flat Washer	2		
36	532223520001	2	Plate	2		
37	910200200075	1	Screw	2		
38	910400500007	1	Spring Washer	2		
39	910400100007	1	Flat Washer	2		

02 Hydraulic Unit (532246023501)

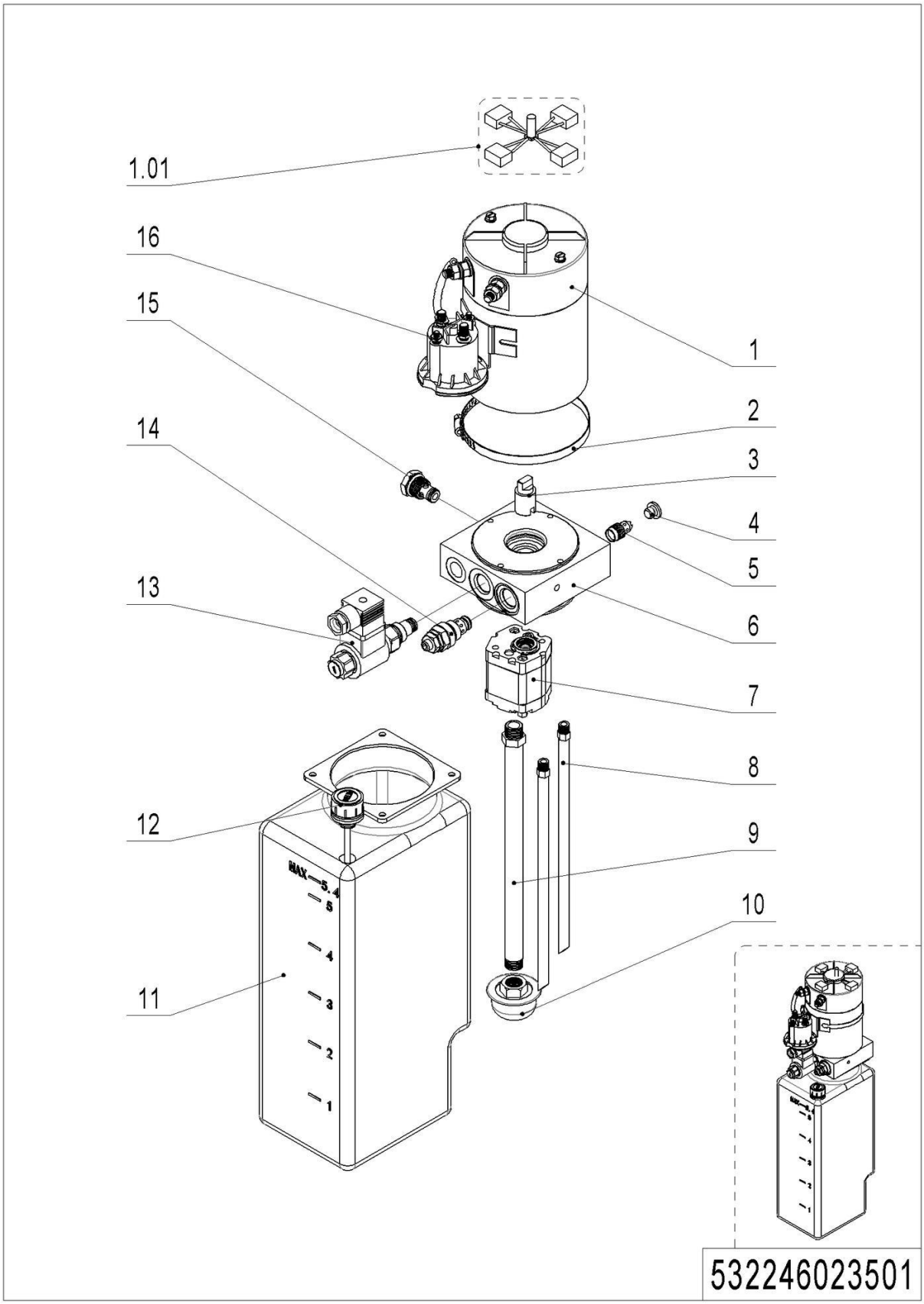

1= Supply as package. 2= Supply with constraints. 3= Phasing-out supply. 4= Supply as assembly. 5= Check other tables.

02 Hydraulic Unit (532246023501)

No.	Item Code	Mark	Item Description	Qty.	Substitute	Note
--	950900100069	2	Pump Unit	1		
1	532298510037	2	Motor	1		
1.01	532298510026	2	Carbon Brush	1		
2	532298510040	2	Hose Clamp	1		
3	532298520007	2	Coupling	1		
4	532298520003	2	End Cap	1		
5	532298510027	2	Valve	1		
6	532298520006	2	Valve Block	1		
7	532298510032	2	Gear Pump	1		
8	532298520004	2	Pipe	2		
9	532298520005	2	Oil Tube	1		
10	532298510031	2	Filter	1		
11	532298510029	2	Tank	1		
12	532298510030	2	Cap-Tank	1		
13	532298510042	2	Magnetic Valve	1		
14	532298510035	2	Overflow Valve	1		
15	532298510028	2	Check Valve	1		
16	532298510036	2	Switch	1		

Chapter 3: Truck Frame

01 Fork Carriage (531846038001)

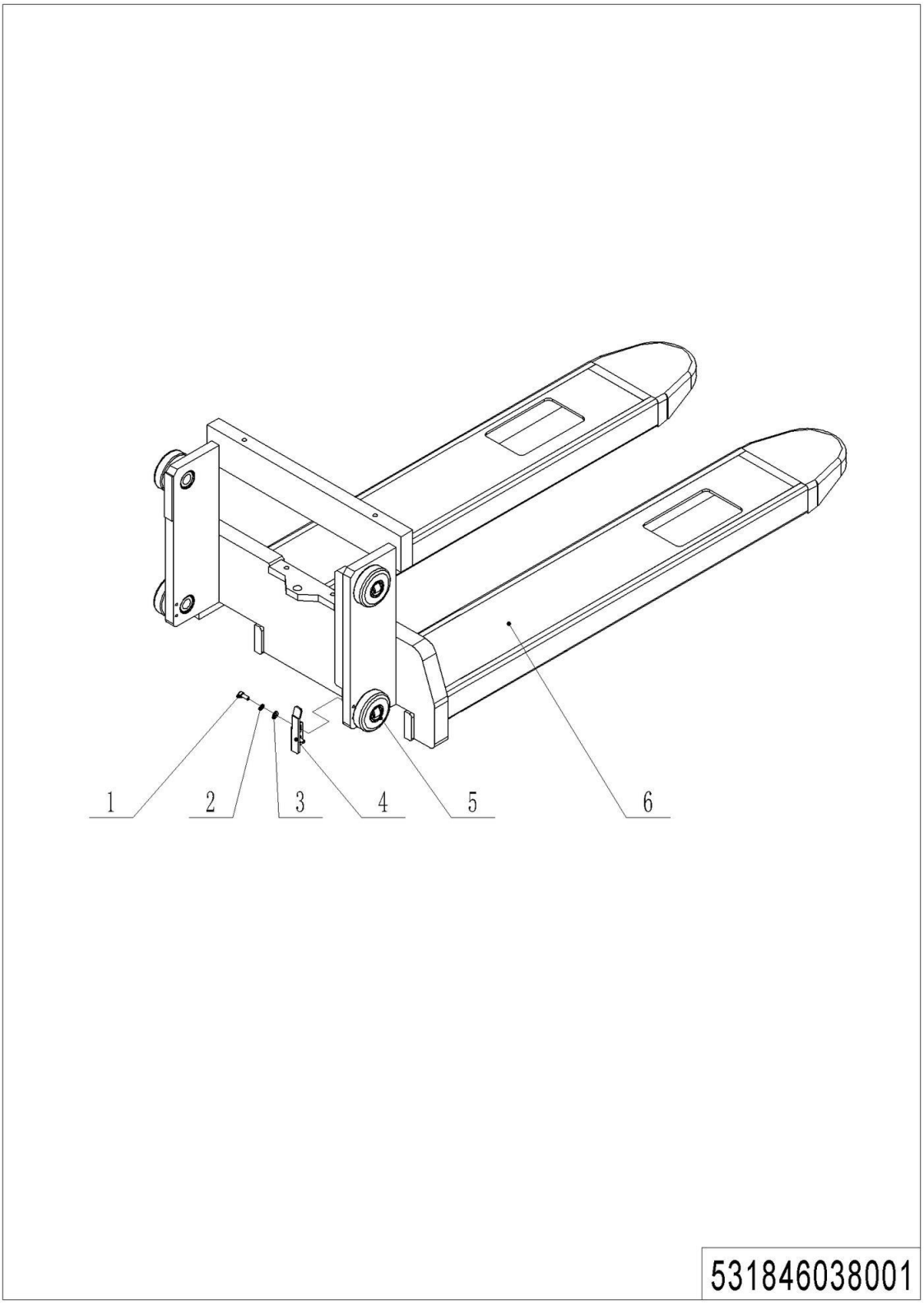

1= Supply as package. 2= Supply with constraints. 3= Phasing-out supply. 4= Supply as assembly. 5= Check other tables.

01 Fork Carriage (531846038001)

No.	Item Code	Mark	Item Description	Qty.	Substitute	Note
1	910200200035	1	Screw	2		Single Mast
2	910400500005	1	Spring Washer	2		Single Mast
3	910400100005	1	Flat Washer	2		Single Mast
4	531838020010	2	Stop Plate	1		Single Mast
5	940200300008		Compound Roller	4		
6	531838010002	2	Fork(,570x1150)	1		Single mast
6	531838010003	2	Fork(,685x1150)	1		Single mast
6	531838010000	2	Fork(570x1150)	1		Two-stage mast
6	531838010001	2	Fork(685x1150)	1		Two-stage mast

02 Chassis (Two Stage Mast) (537246021501)

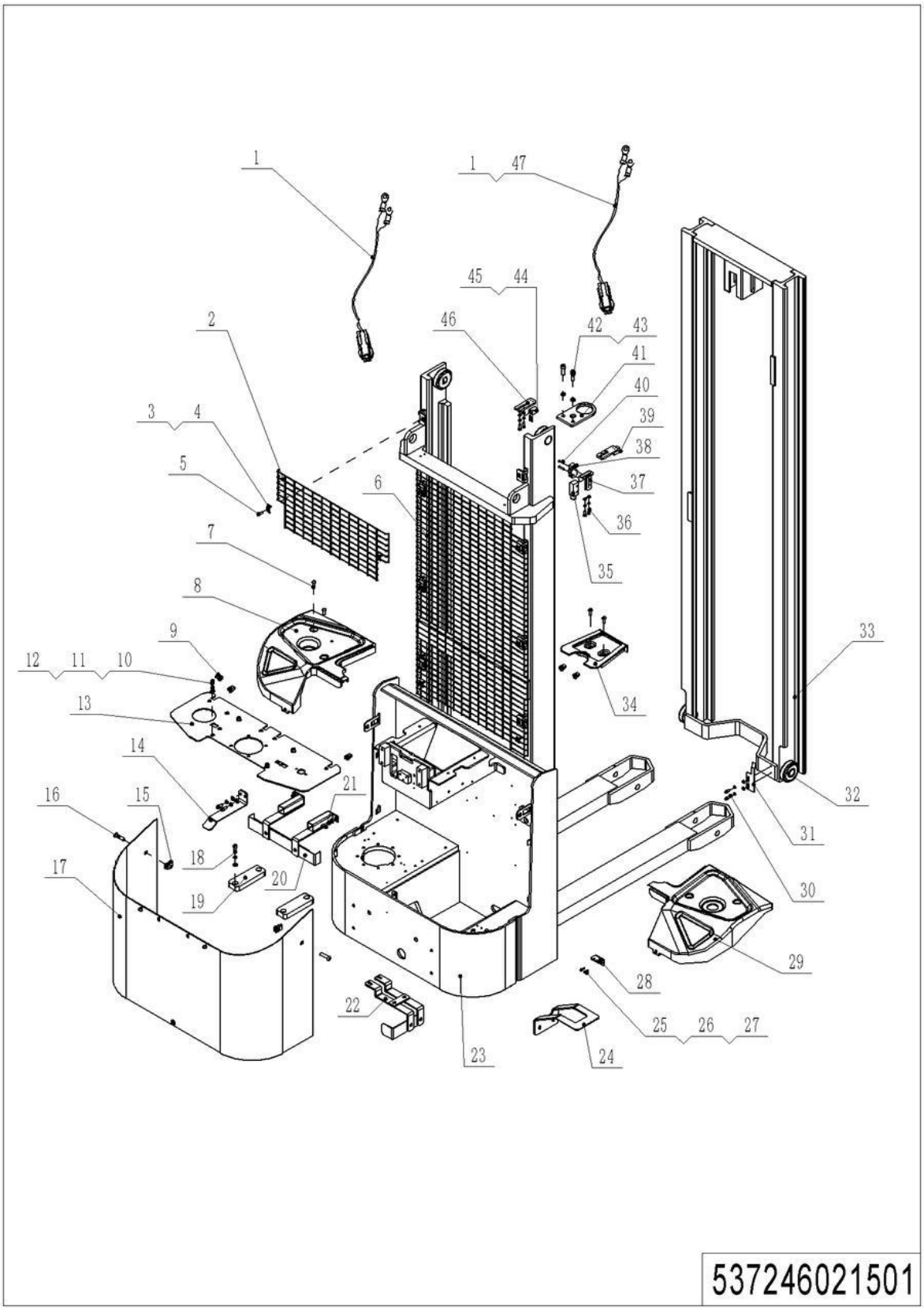

02 Chassis (Two Stage Mast) (537246021501)

No.	Item Code	Ma	Item Description	Qty.	Substitute	Note
1	531833010002	2	Wire	2		
2	531821520045	2	Protective Frame	1		
3	320443020321	2	Press Plate	8		
4	940400400001	1	Cage Nut	8		
5	910200200038	1	Screw	8		
6	531821520042	2	Protective Frame	1		2900
6	531821520041	2	Protective Frame	1		3200
6	531821520040	2	Protective Frame	1		3600
7	941100100012	1	Screw,M8x20	8		
8	509821520025	2	Protective Cover	1		
9	940400400002	1	Cage Nut	6		
10	910200200054	1	Screw	8		
11	910400500006	1	Spring Washer	16		
12	910400100006	1	Flat Washer	16		
13	537221520014	2	Mounting Plate	1		
14	537221520016	2	Bracket	1		
15	940400400003	1	Cage Nut	2		
16	941100100004	1	Screw	2		
17	509821510001	2	Cover	1		
18	910200200058	1	Screw	4		
19	537237020006	2	Subplate	2		
20	537237010000	2	Mounting Plate	1		
21	910200200055	1	Screw	4		
22	537237010001	2	Mounting Plate	1		
23	537221510000	2	Chassis(3600,570x1150)	1		3600,570x1150
23	537221510002	2	Chassis(3200,570x1150)	1		3200,570x1150
23	537221510004	2	Chassis(2900,570x1150)	1		2900,570x1150
23	537221510006	2	Chassis(3600,685x1150)	1		3600,685x1150
23	537221510007	2	Chassis(3200,685x1150)	1		3200,685x1150
23	537221510008	2	Chassis(2900,685x1150)	1		2900,685x1150

02 Chassis (Two Stage Mast) (537246021501) Continuation

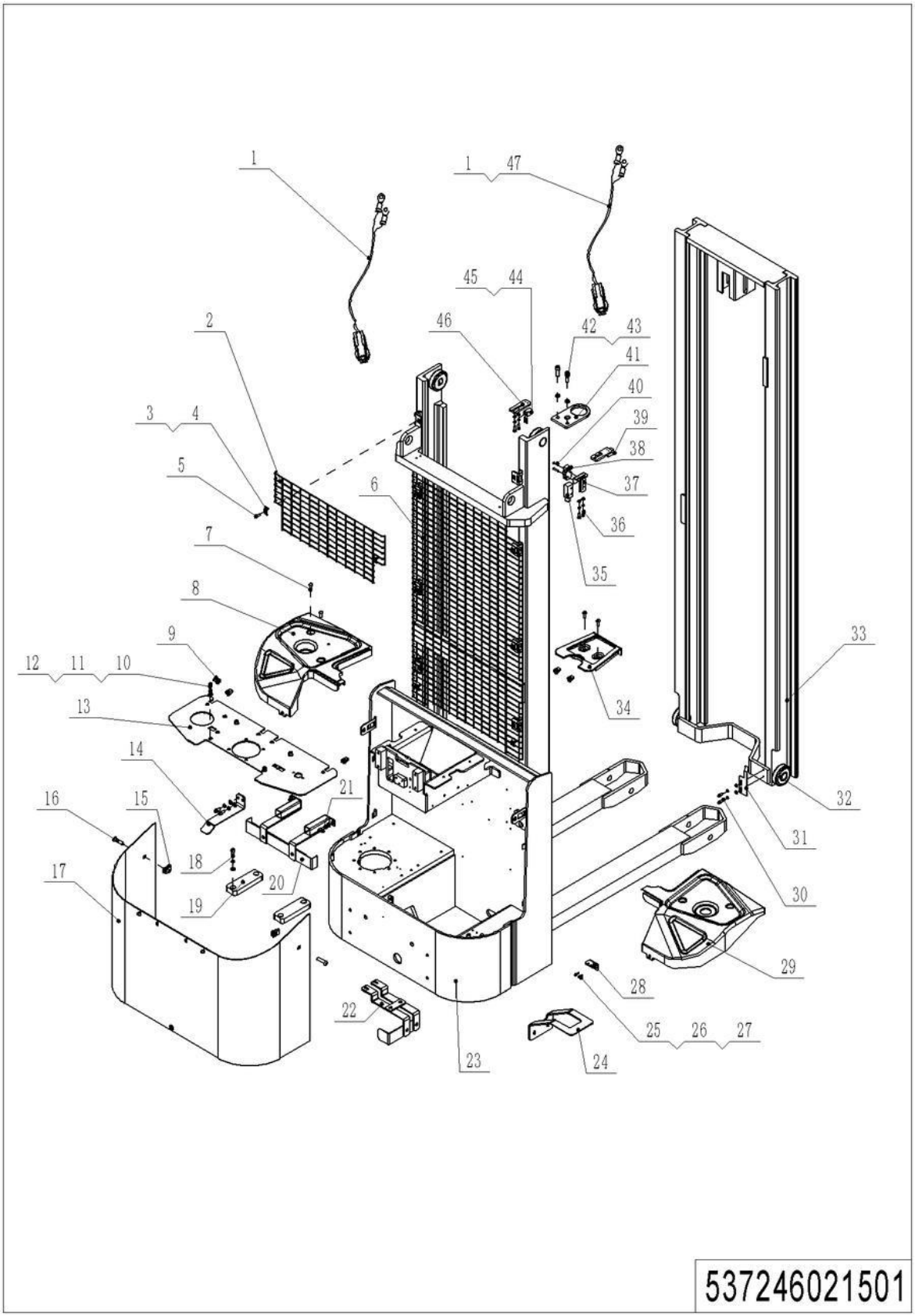

1= Supply as package. 2= Supply with constraints. 3= Phasing-out supply. 4= Supply as assembly. 5= Check other tables.

02 Chassis (Two Stage Mast) (537246021501) Continuation

No.	Item Code	Mark	Item Description	Qty.	Substitute	Note
24	537221520015	2	Plate	1		
25	910200200033	1	Screw	2		
26	910400500005	1	Spring Washer	10		
27	910400100005	1	Flat Washer	10		
28	531821520031	2	Mounting Plate	1		
29	509821520022	2	Protective Cover	1		
30	910200300017	1	Screw	2		
31	531821520001	2	Stop Plate	1		
32	940200300007		Compound Roller	4		
33	537221510001	2	Inner Mast(3600)	1		
33	537221510003	2	Inner Mast(3200)	1		
33	537221510005	2	Inner Mast(2900)	1		
34	509821520021	2	Protective Cover	1		
35	920200300008	2	Protective Cover	1		
36	910200200035	1	Screw	6		
37	531821520006	2	Fixing Plate	1		
38	920200300001	2	Microswitch	1		
39	920200400033	2	Proximity Switch	1		
40	910200400006	1	Screw	2		
41	532644020097	2	Fixing Plate	1		
42	910200200077	1	Screw	2		
43	910400500007	1	Spring Washer	2		
44	910200500015	1	Screw	4		
45	920200400032	2	Proximity Switch	1		
46	531821520007	2	Fixing Plate	2		
47	531833010018	2	Wire Harness	1		

03 Chassis (Single Stage Mast) (537246021502)

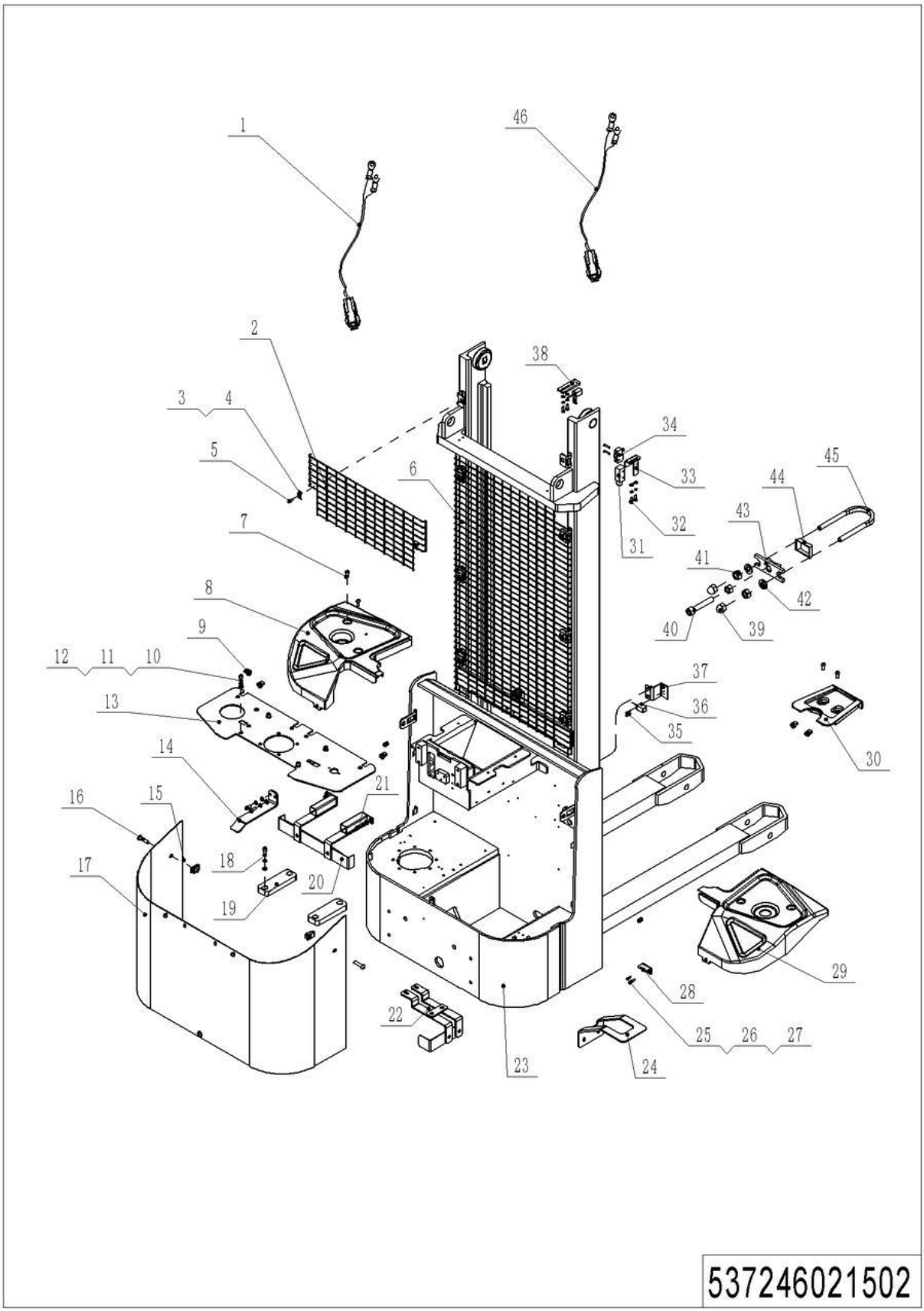

03 Chassis (Single Stage Mast) (537246021502)

No.	Item Code	Ma	Item Description	Qty.	Substitute	Note
1	531833010002	2	Wire	2		
2	531821520045	2	Protective Frame	1		
3	320443020321	2	Press Plate	8		
4	940400400001	1	Cage Nut	8		
5	910200200038	1	Screw	8		
6	531821520062	2	Protective Frame	1		2000
6	531821520061	2	Protective Frame	1		1600
7	941100100012	1	Screw,M8x20	8		
8	509821520025	2	Protective Cover	1		
9	940400400002	1	Cage Nut	6		
10	910200200054	1	Screw	8		
11	910400500006	1	Spring Washer	16		
12	910400100006	1	Flat Washer	16		
13	537221520014	2	Mounting Plate	1		
14	537221520016	2	Bracket	1		
15	940400400003	1	Cage Nut	2		
16	941100100004	1	Screw	2		
17	509821510001	2	Cover	1		
18	910200200058	1	Screw	4		
19	537237020006	2	Subplate	2		
20	537237010000	2	Mounting Plate	1		
21	910200200055	1	Screw	4		
22	537237010001	2	Mounting Plate	1		
23	537221510009	2	Chassis(2000,570x1150)	1		
23	537221510010	2	Chassis(1600,570x1150)	1		
23	537221510011	2	Chassis(2000,685x1150)	1		
23	537221510012	2	Chassis(1600,685x1150)	1		
24	537221520015	2	Plate	1		
25	910200200033	1	Screw	4		
26	910400500005	1	Spring Washer	10		

03 Chassis (Single Stage Mast) (537246021502) Continuation

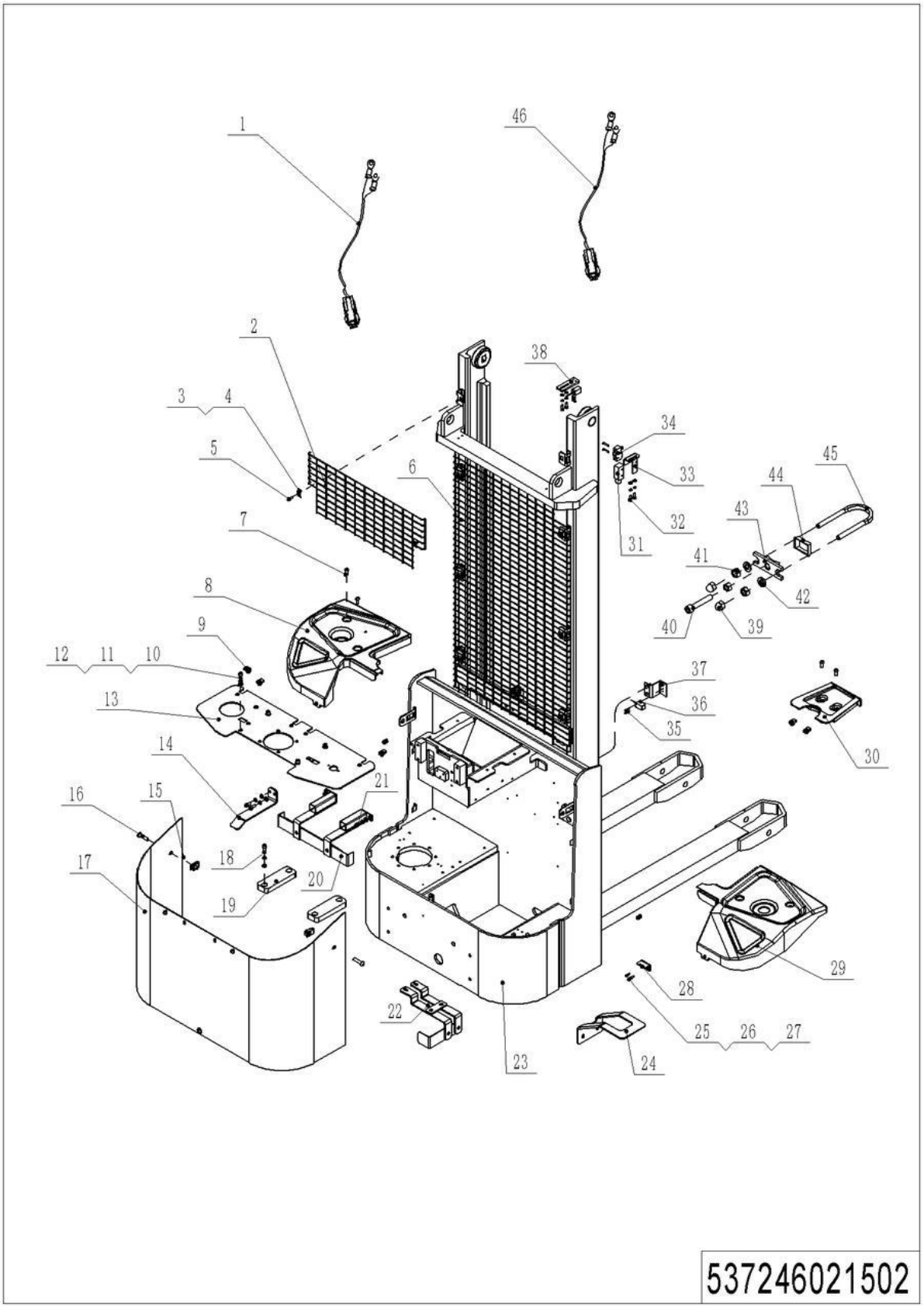

03 Chassis (Single Stage Mast) (537246021502) Continuation

No.	Item Code	Ma	Item Description	Qty.	Substitute	Note
27	910400100005	1	Flat Washer	10		
28	531821520031	2	Mounting Plate	1		
29	509821520022	2	Protective Cover	1		
30	509821520021	2	Protective Cover	1		
31	920200300008	2	Protective Cover	1		
32	910200200035	1	Screw	4		
33	531821520006	2	Fixing Plate	1		
34	920200300001	2	Microswitch	1		
35	910200500015	1	Screw	4		2 for 1600 Model
36	920200400032	2	Proximity Switch	2		1 for 1600 Model
37	532021520053	2	Fixing Plate	1		
38	531821520007	2	Fixing Plate	1		
39	910301000001	1	Nut	2		
40	910200200083	1	Screw	1		
41	910300100007	1	Nut	3		
42	910400100007	1	Flat Washer	2		
43	255044020130	2	Fixing Base	1		
44	255044020129	2	Protective Cover	1		
45	531821520056	2	Bolt	1		
46	531833010018	2	Wire Harness	1		

Chapter 4: Steering System, Braking System, Wheels

01 Tiller Unit (537246011001)

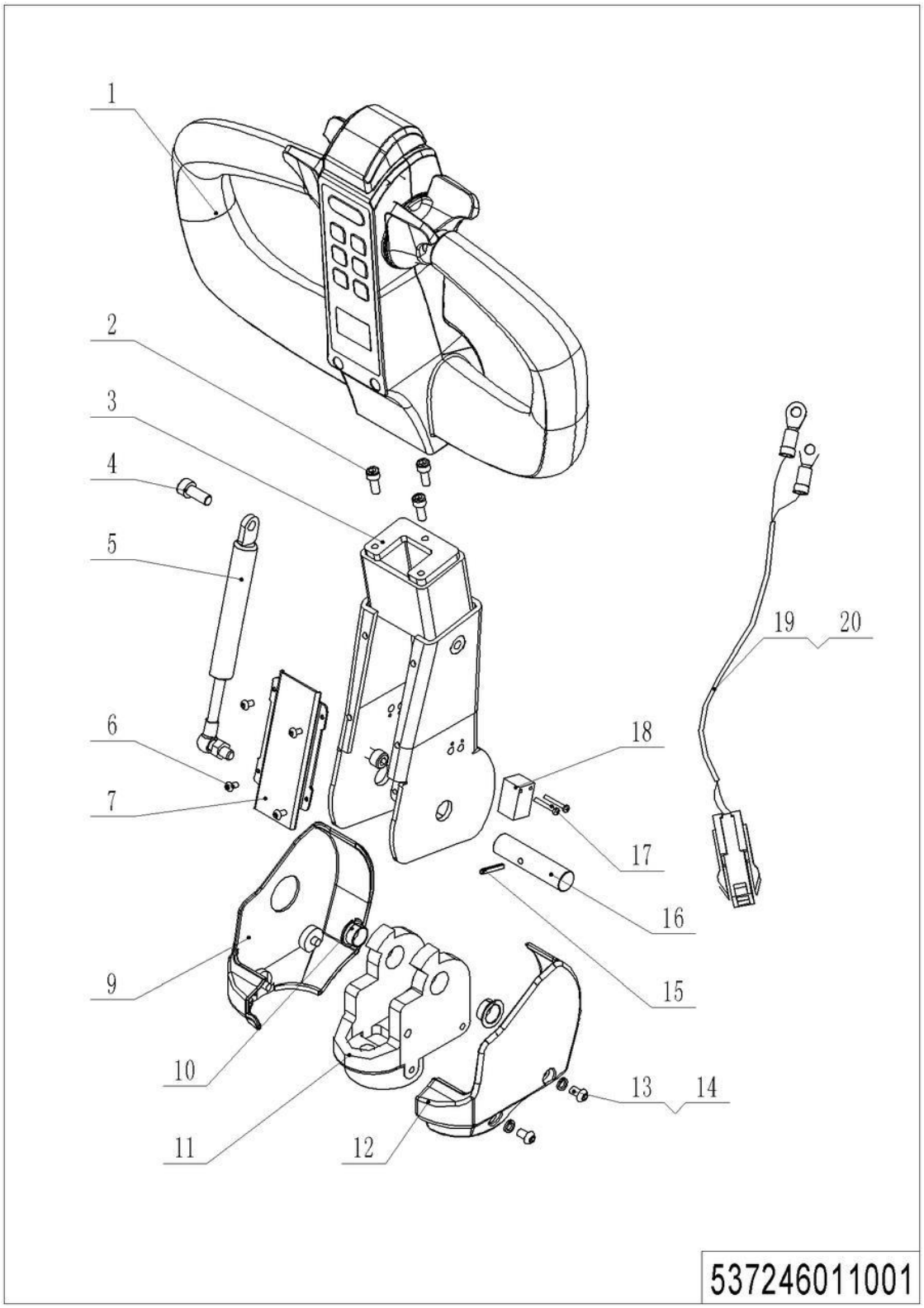

01 Tiller Unit (537246011001)

No.	Item Code	Mark	Item Description	Qty.	Substitute	Note
1	----------	5	手柄头	1		Check 537246011002
2	910200200035	1	Screw	3		
3	537211010000	2	Tiller	1		
4	910200200057	1	Screw	1		
5	940400100044	2	Air Spring	1		
6	910200300005	1	Screw	4		
7	537211020004	2	Close Plate	1		
8	505611020007	1	Screw	1		
9	535911020005	2	Protective Cover	1		
10	940500200002	1	Bushing	1		
11	535911020009	2	Bracket	1		
12	535911020006	2	Protective Cover	1		
13	910400500005	1	Spring Washer	4		
14	910200300016	1	Screw	4		
15	910600400013	1	Spring Pin	1		
16	505611020008	2	Axle	1		
17	910200500015	1	Screw	2		
18	920200400034	2	Proximity Switch	1		
19	537233010001	2	Wire Harness	1		
20	531833010002	2	Wire	1		

02 Control Handle (537246011002)

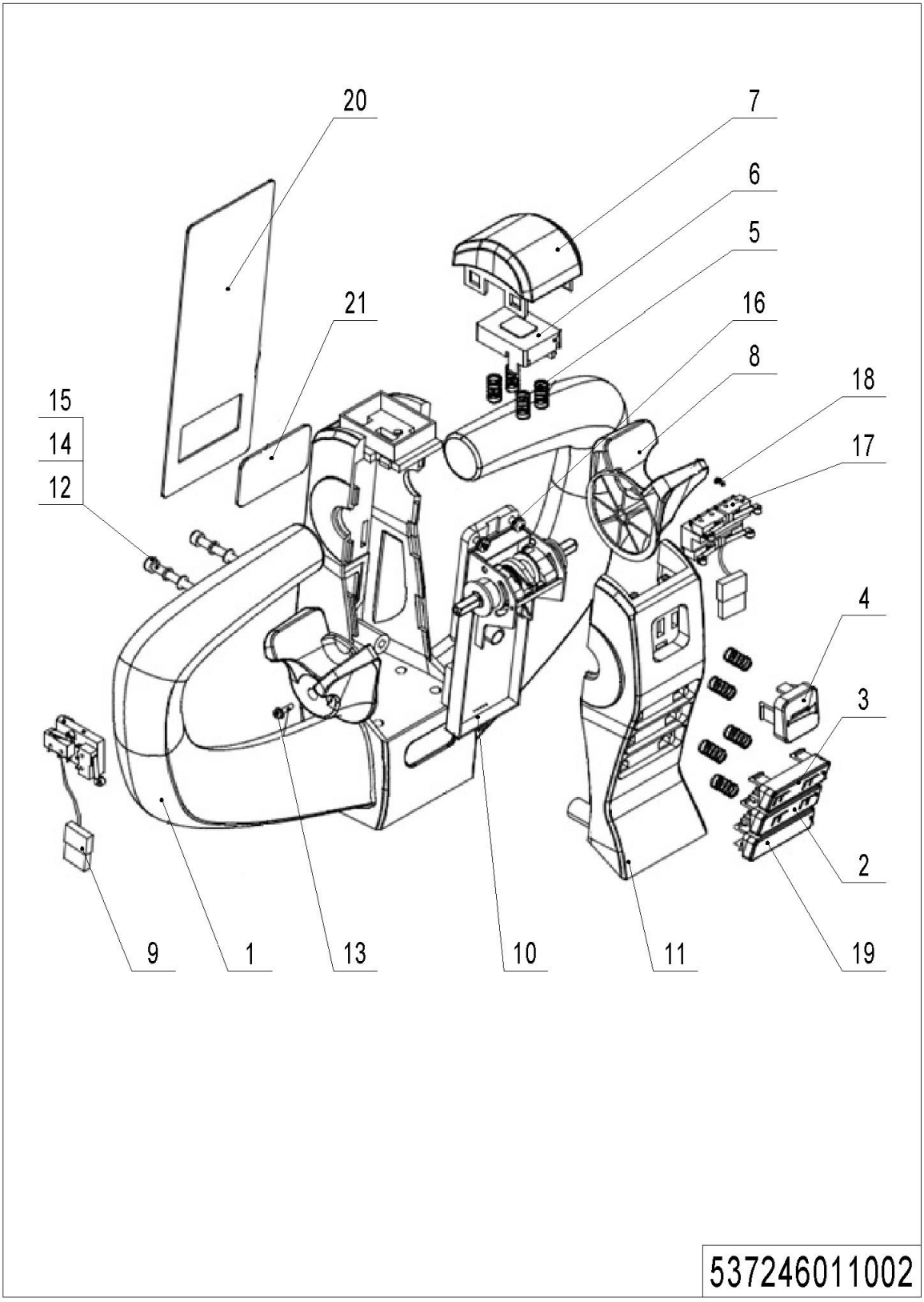

1= Supply as package. 2= Supply with constraints. 3= Phasing-out supply. 4= Supply as assembly. 5= Check other tables.

02 Control Handle (537246011002)

No.	Item Code	Mark	Item Description	Qty.	Substitute	Note
1	509898520001	2	Plastic Handle	1		
2	509898520002	2	Button	1		
3	509898520003	2	Button	1		
4	509898520004	2	Button	1		
5	537098520005	1	Spring	10		φ0.6xφ8.7x16
6	509898520006	2	Cover	1		
7	509898520007	2	Button	1		
8	509898520008	2	Dial Key	2		
9	509898510000	2	Wire Harness	1		
10	537298510001	2	Accelerator	1		
11	509898520009	2	Cover	1		
12	910200200027	1	Screw	2		
13	910201900002	1	Screw	2		
14	910400500004	1	Spring Washer	2		
15	910400100004	1	Flat Washer	2		
16	910201900003	1	Screw	4		
17	509898510002	2	Wire Harness	1		
18	910201400001	1	Screw	2		
19	509898520016	2	Button	1		
20	509898520017	2	Button	1		
21	509898510003	2	Screen Protection	1		

03 Steering Unit (537246031201)

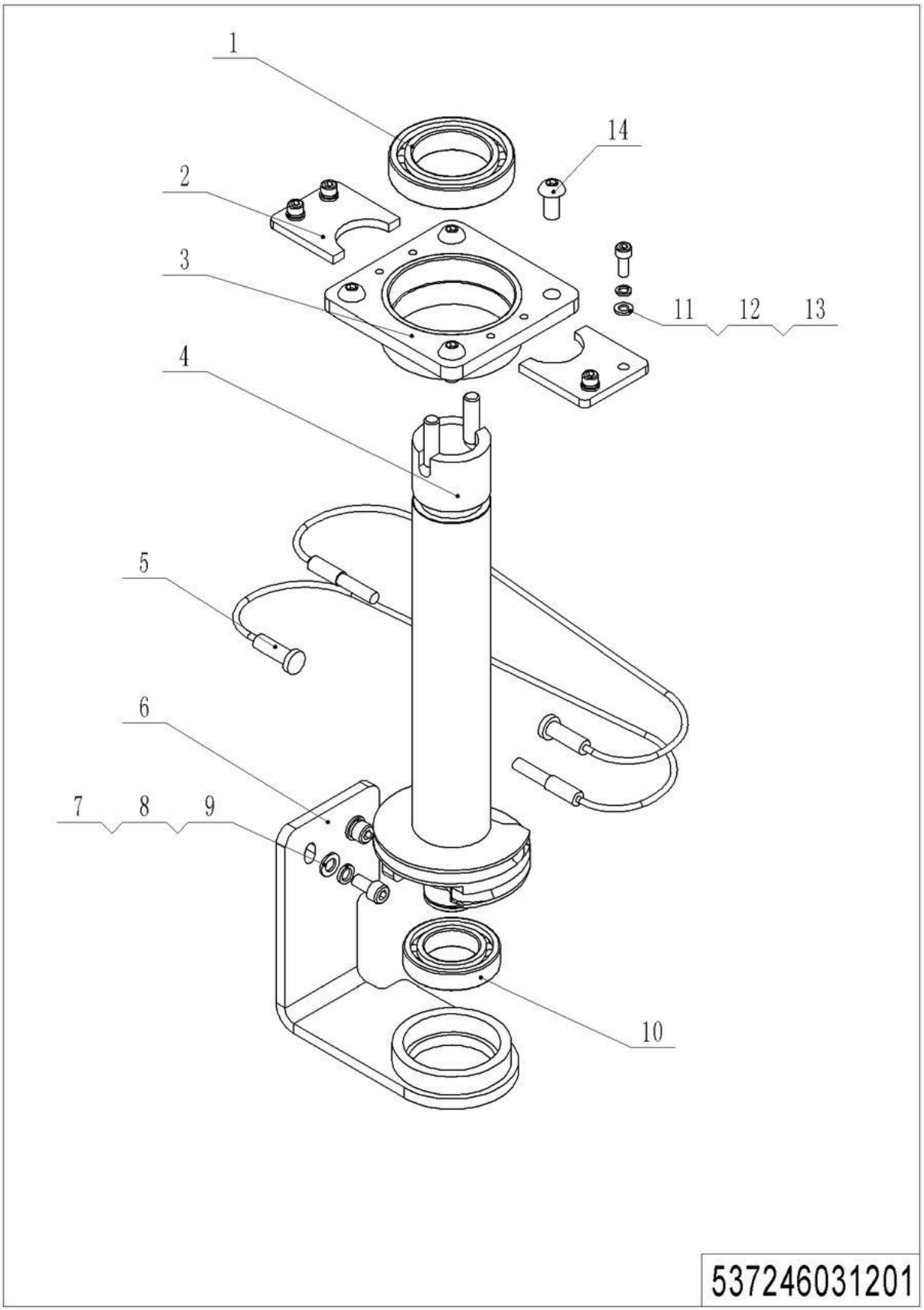

1= Supply as package. 2= Supply with constraints. 3= Phasing-out supply. 4= Supply as assembly. 5= Check other tables.

03 Steering Unit (537246031201)

No.	Item Code	Mark	Item Description	Qty.	Substitute	Note
1	910700200009	2	Bearing	1		
2	537231220010	2	Fixing Plate	2		
3	537231210000	2	Fixing Base	1		
4	537231210001	2	Shaft Welding	1		
5	535931210003	2	Wirerope	2		
6	537231210003	2	Bracket	1		
7	910200200055	1	Screw	2		
8	910400500006	1	Spring Washer	2		
9	910400100006	1	Flat Washer	2		
10	910700200007	2	Bearing	1		
11	910200200035	1	Screw	4		
12	910400500005	1	Spring Washer	4		
13	910400100005	1	Flat Washer	4		
14	910200300028	1	Screw	4		

04 Load Wheel (532646017001)

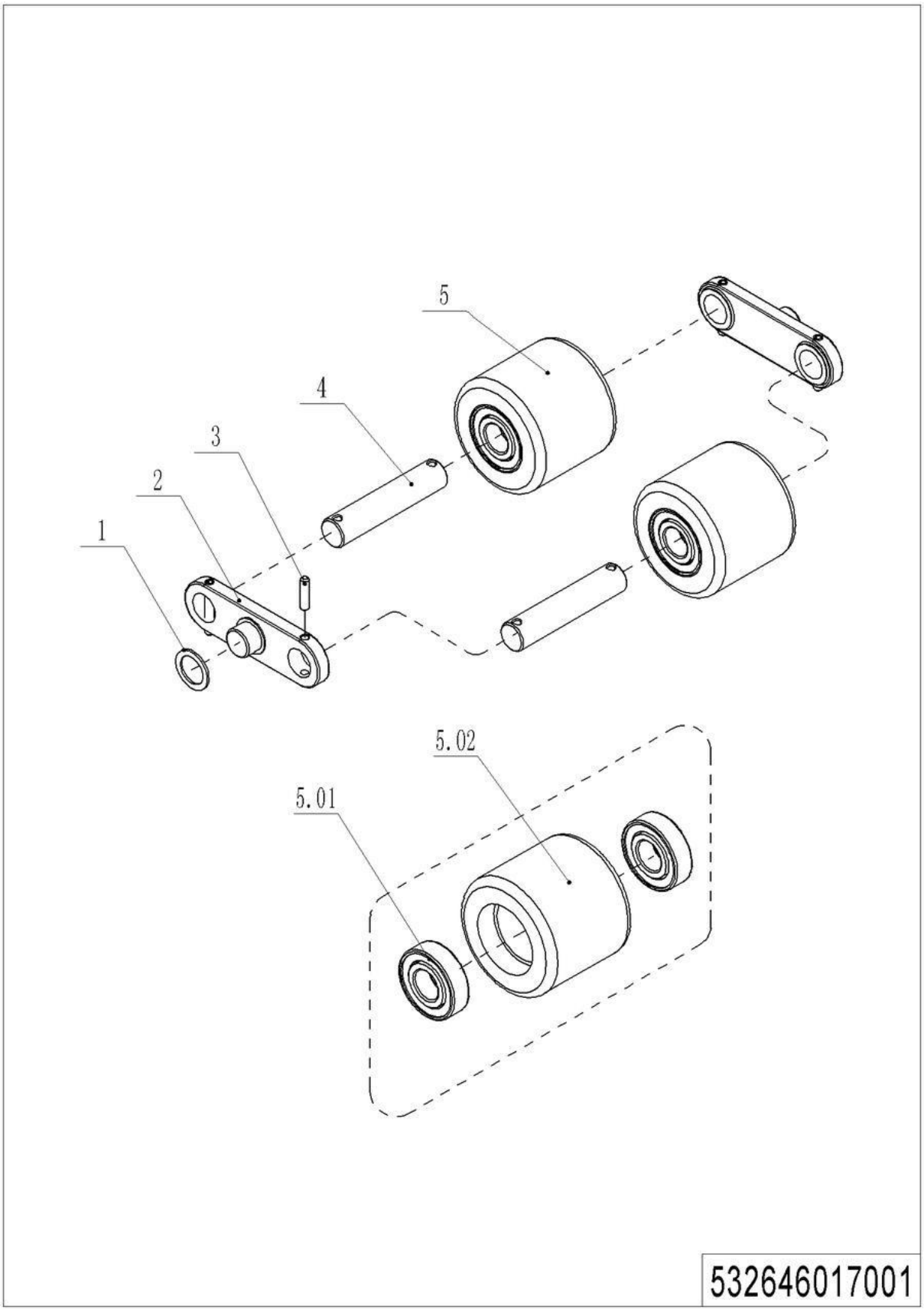

1= Supply as package. 2= Supply with constraints. 3= Phasing-out supply. 4= Supply as assembly. 5= Check other tables.

04 Load Wheel (532646017001)

No.	Item Code	Mark	Item Description	Qty.	Substitute	Note
1	940600500012	2	Washer	4		
2	532617020002	2	Plate	4		
3	910600400027	1	Spring Pin	8		
4	502317020001	2	Axle	4		
5	502398510002		Wheel	4		
5.01	910700200019		Bearing	8		
5.02	940300300005		WheelΦ80x70	4		

05 Caster (532246016501)

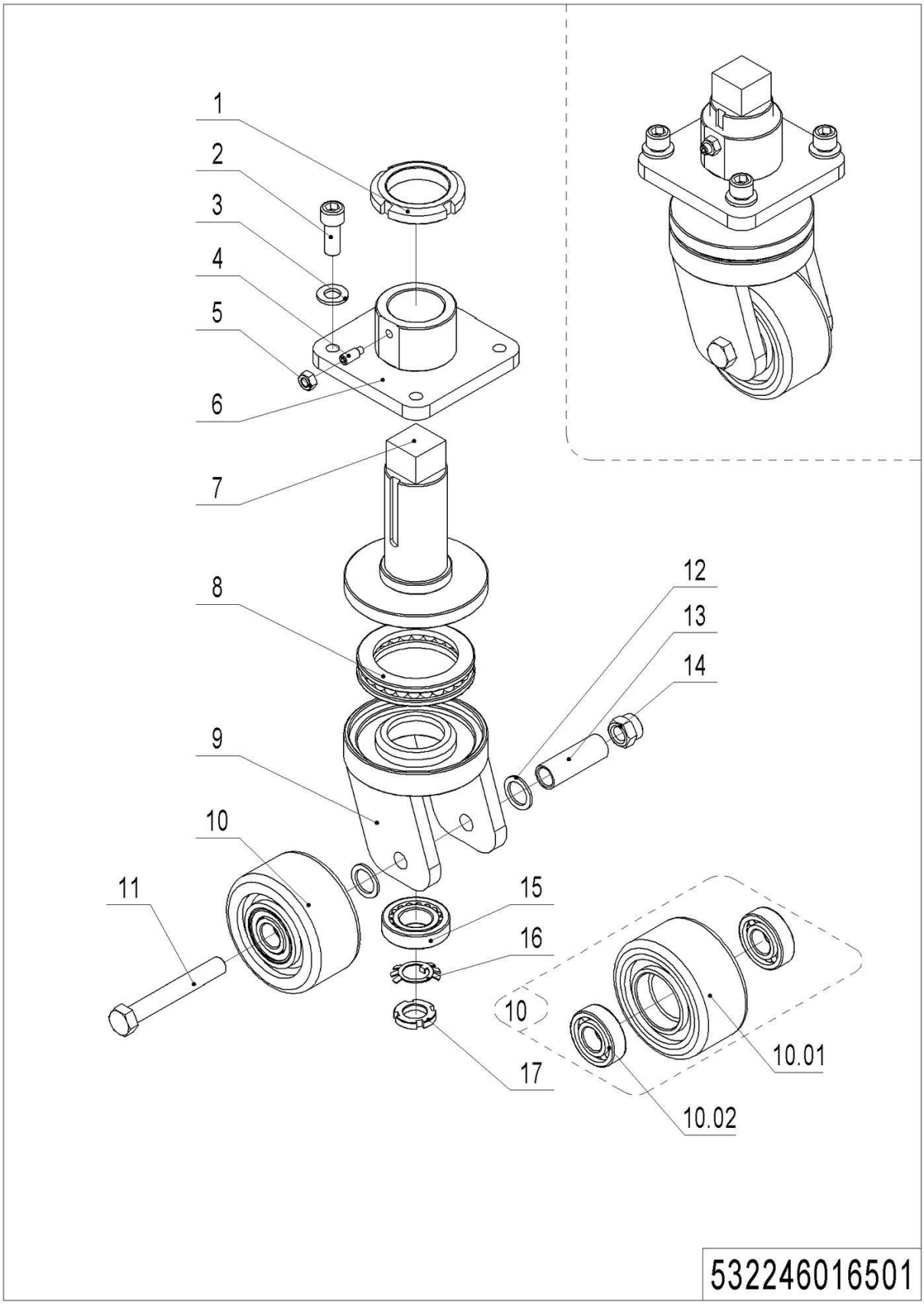

1= Supply as package. 2= Supply with constraints. 3= Phasing-out supply. 4= Supply as assembly. 5= Check other tables.

05 Caster (532246016501)

No.	Item Code	Mark	Item Description	Qty.	Substitute	Note
1	941100900004	1	Nut	1		
2	910200200098	1	Screw	4		
3	910400100008	1	Flat Washer	4		
4	910201000012	1	Screw	1		
5	910300100006	1	Nut	1		
6	532216510003	2	Fixing Base	1		
7	532216510002	2	Axle	1		
8	910700700011		Bearing	1		
9	532216510001	2	Wheel Carrier	1		
10	532298510004		Caster Assembly	1		
10.01	940300300030		WheelΦ100x50	1		
10.02	910700200019		Bearing	2		
11	910100100069	1	Bolt	1		
12	940600500005	1	Washer	4		
13	532216520006		Sleeve	1		
14	910300500007	1	Nut	1		
15	910700600001		Bearing	1		
16	910400900002	1	Lock Washer	1		
17	910300700008	1	Nut	1		

Chapter 5: Electrical Parts

01 Wire Harness (537246033001)

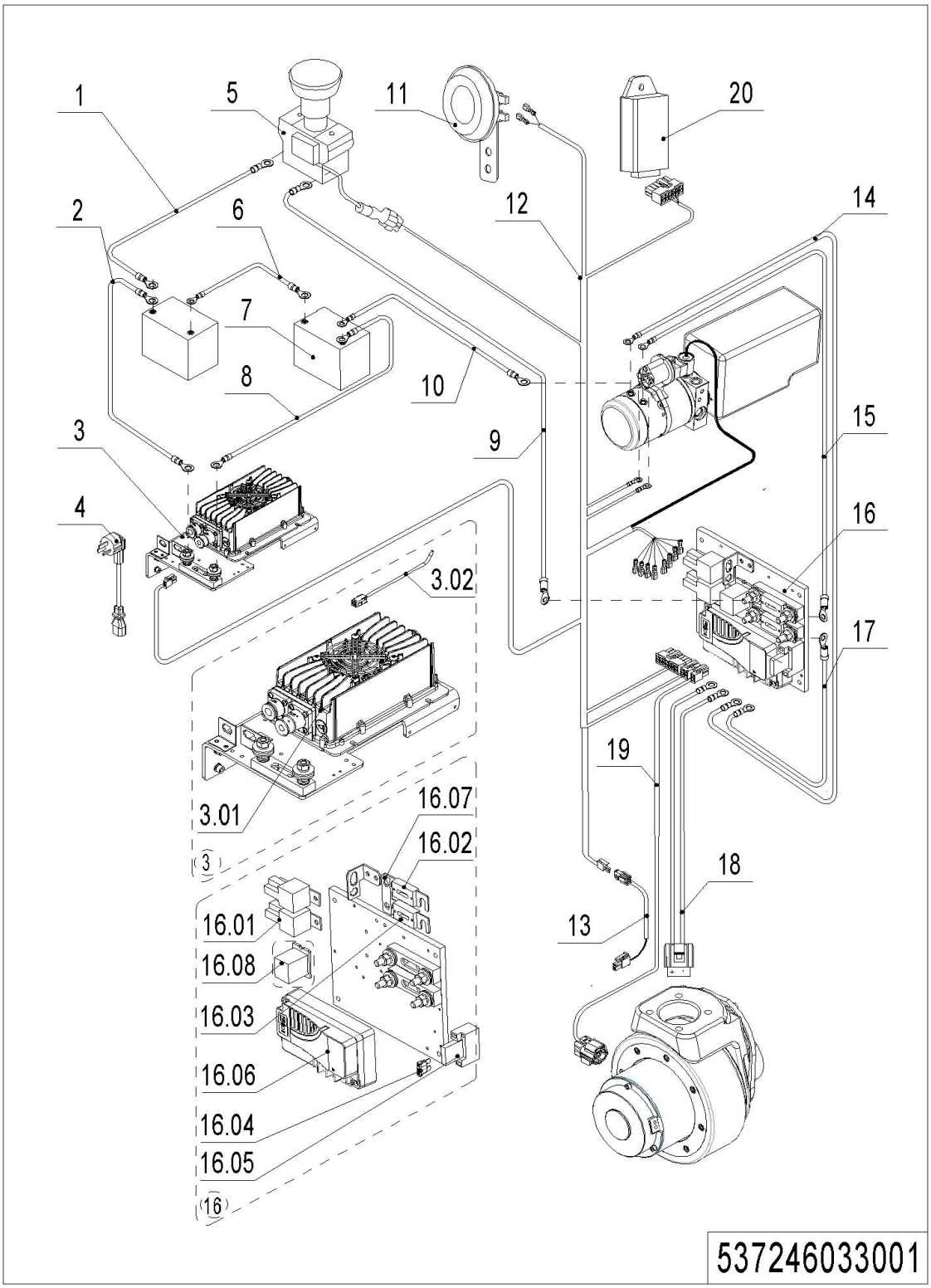

01 Wire Harness (537246033001)

No.	Item Code	Mark	Item Description	Qty.	Substitute	Note
1	537233010007	2	Cable	1		
2	537233010012	2	Cables	1		
3	537036510000	2	charger24V15A(Asia)	1		
3	537036510001	2	charger24V15A(ENG)	1		
3	537036510002	2	charger24V15A(US)	1		
3	537036510003	2	charger24V15A(EU)	1		
3	537036510004	2	charger24V15A(AUS)	1		
3	537036510005	2	charger24V15A(ITA)	1		
3	537036510006	2	charger24V15A(SWE)	1		
3.01	921000100056	2	Charger24V15A	1		
3.02	922000100025	2	Lamp	1		
4	921500200008	2	Spring Cable（Asia）	1		
4	921500200004	2	Spring Cable(ENG)	1		
4	921500200002	2	Spring Cable(USA)	1		
4	921500200005	2	Spring Cable(EU)	1		
4	921500200003	2	Spring Cable(AUS)	1		
4	921500200006	2	Spring Cable(ITY)	1		
4	921500200007	2	Spring Cable(SWD)	1		
5	920200100001	2	Emergency Button	1		
6	537233010011	2	Cable	1		
7	537237001000	2	Battery12V100Ah	2		
8	537233010013	2	Cables	1		
9	537233010002	2	Cable	1		
10	537233010006	2	Cable	1		
11	920500100001	2	Horn	1		
12	537233010000	2	Wire Harness	1		Chassis＞1600
12	537233010015	2	Wire Harness	1		Chassis=1600
13	537233010017	2	Wire Harness	1		With Temp Sensor
14	537233010006	2	Cable	1		
15	537233010004	2	Cable	1		

1= Supply as package. 2= Supply with constraints. 3= Phasing-out supply. 4= Supply as assembly. 5= Check other tables.

01 Wire Harness (537246033001) Continuation

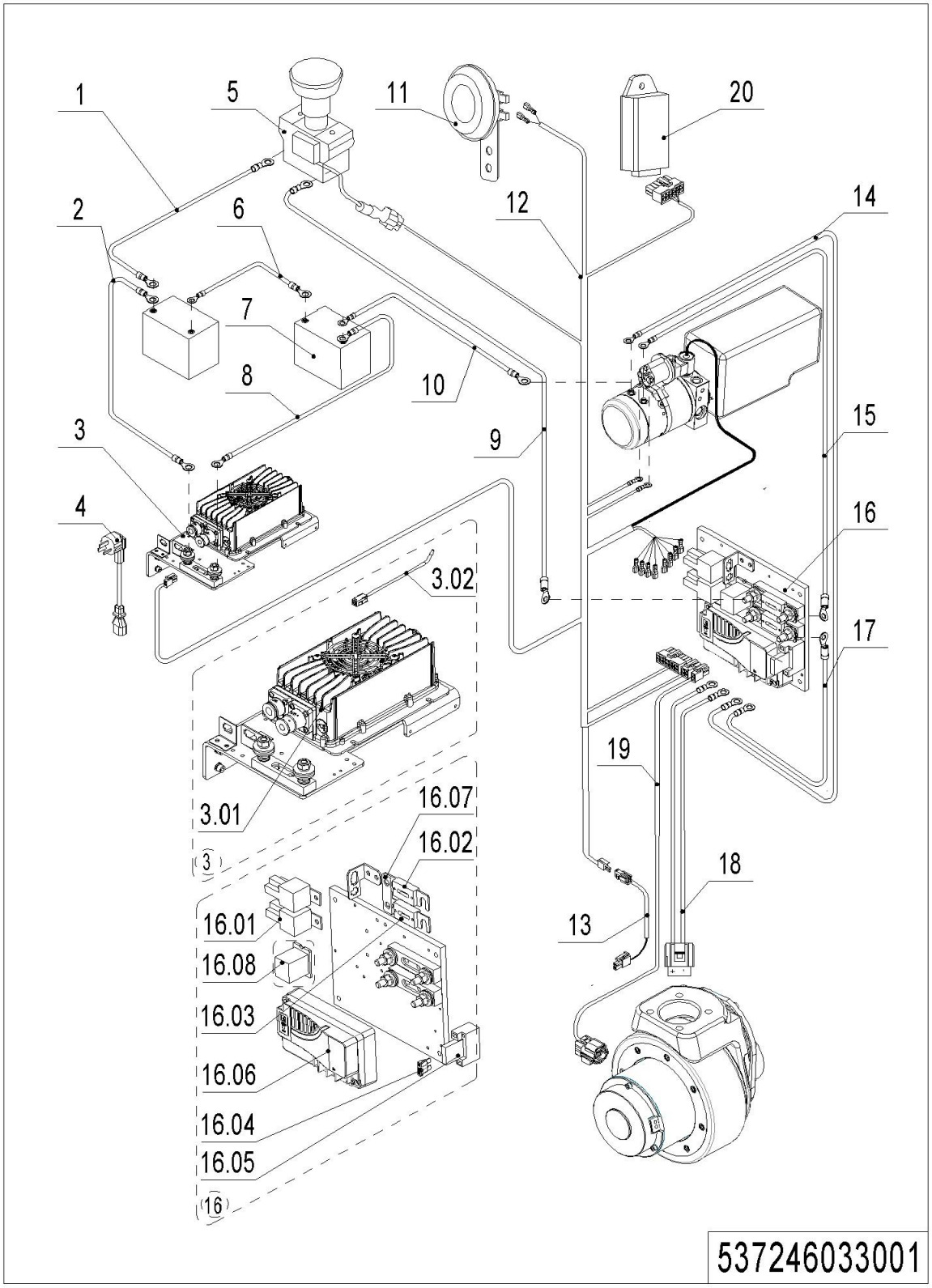

01 Wire Harness (537246033001) Continuation

No.	Item Code	Mark	Item Description	Qty.	Substitute	Note
16	537233010014	2	Electronic Components	1		
16.01	920800100011	2	Relay	2		
16.02	920100100008	2	Fuse	1		
16.03	920100100004	2	Fuse	1		
16.04	920100200002	2	Fuse	1		
16.05	920100400006	2	Fuse Holder	1		
16.06	921400100097	2	Controller	1		
16.07	505633020003	2	Copper Busbar	1		
16.08	532033010023	2	Module	1		With Temp Sensor
17	537233010003	2	Cables	1		
18	537233010009	2	Wire Harness	1		
19	537233010010	2	Wire Harness	1		
20	921200100015	2	Module DTJ00403A	1		

Chapter 6: Guard Arm, Platform

01 Guard Arm (537246017501)

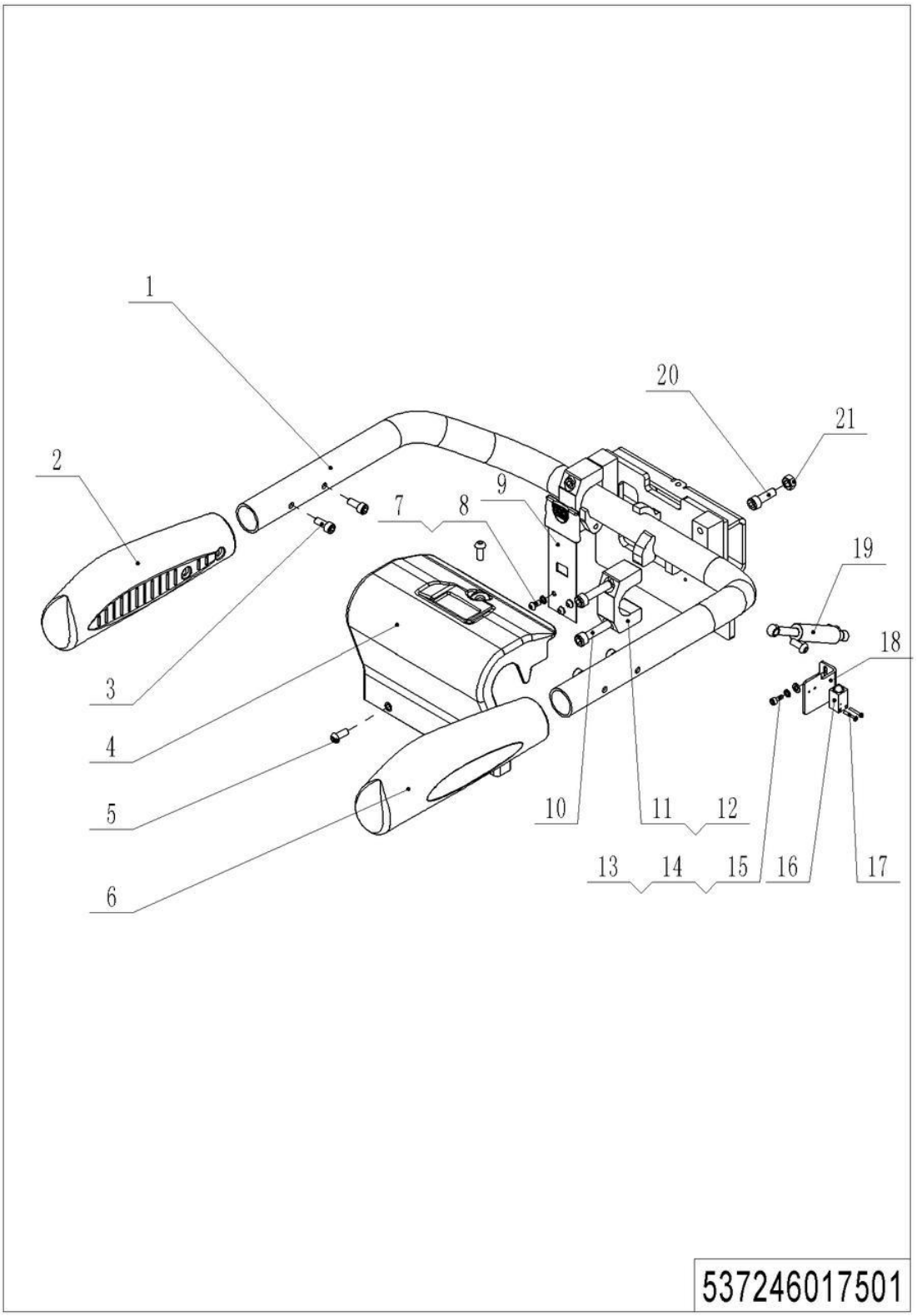

01 Guard Arm (537246017501)

No.	Item Code	Mark	Item Description	Qty.	Substitute	Note
1	537217510000	2	Protective Arm	1		
2	505617510004	2	Guard Arm Sleeve	1		
3	910200300025	1	Screw	9		
4	509821520023	2	Protective Cover	1		
5	941100100012	1	Screw,M8x20	3		
6	505617510002	2	Guard Arm Sleeve	1		
7	910400500005	1	Spring Washer	3		
8	910200300017	1	Screw	3		
9	505617510005	2	Leaf Spring	1		
10	910200200080	1	Screw	4		
11	505617520005	2	Fixing Base	1		
12	505617520021	2	Friction	1		
13	910200200022	1	Screw	2		
14	910400500004	1	Spring Washer	2		
15	910400100004	1	Flat Washer	2		
16	505633510001	2	Proximity Switch	1		
17	910200500015	1	Screw	2		
18	537217520009	2	Reflector	1		
19	940400100006	2	Air Spring	1		
20	910200200077	1	Screw	1		
21	910300100007	1	Nut	1		

02 Platform (537246018001)

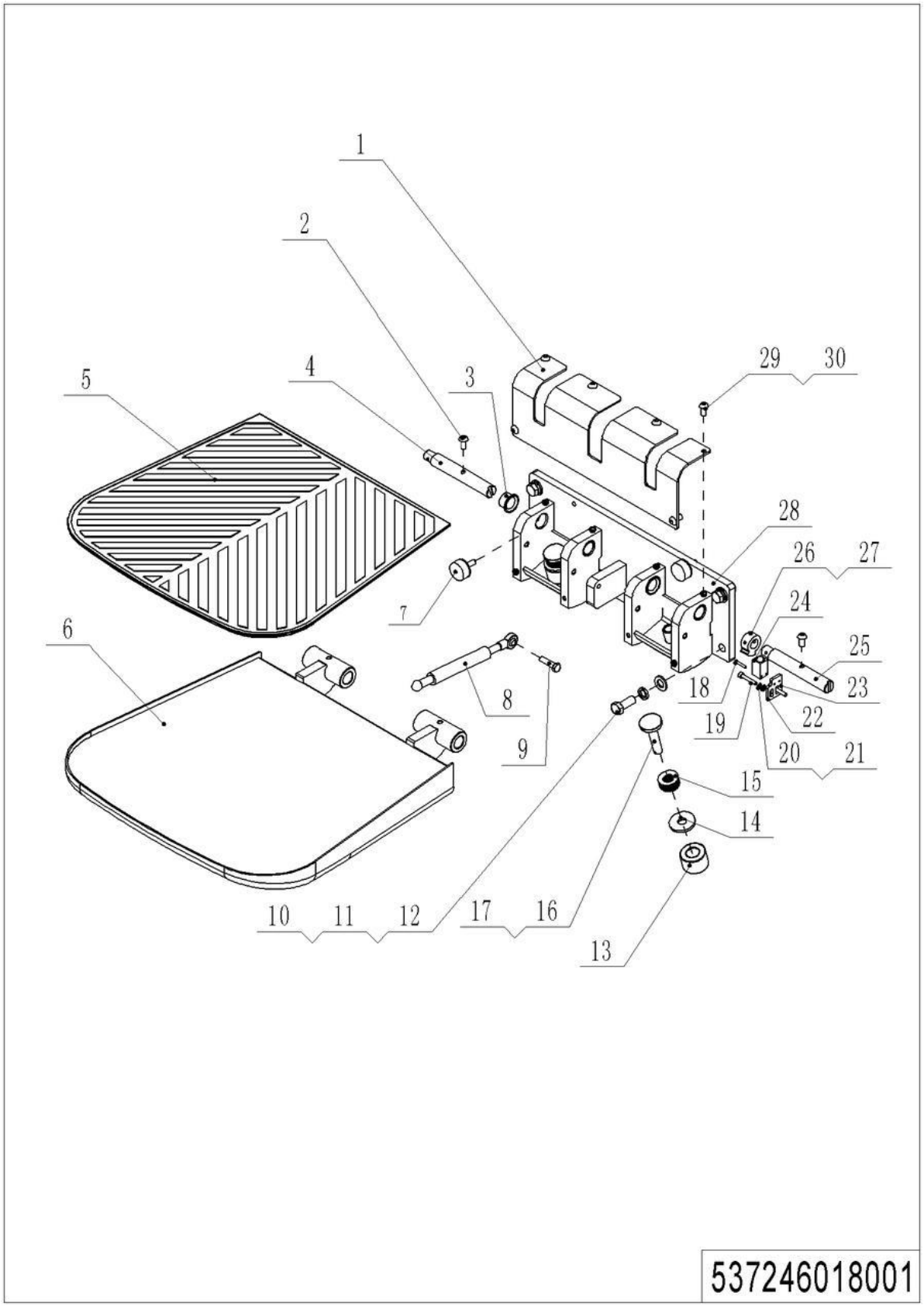

02 Platform (537246018001)

No.	Item Code	Mark	Item Description	Qty.	Substitute	Note
1	509818020004	2	Protective Cover	1		
2	910200300018	1	Screw	2		
3	505618020020	2	Axle	1		
4	940500200008	4	Bushing	4		
5	505618020018	1	Rubber Mat	1		
6	509818010000	2	Platform	1		
7	505618020016	2	Crash Pad	2		
8	940400100039	1	Air Spring	1		
9	910100300024	1	Bolt	1		
10	910100300050	1	Bolt	4		
11	910400500008	1	Spring Washer	4		
12	910400100008	1	Flat Washer	4		
13	505618020029	2	Crash Pad	2		
14	505618020022	2	Crash Pad	2		
15	505618020030	2	Sleeve	2		
16	505618020021	2	Pin	2		
17	910600600026	1	Cotter Pin	2		
18	910200500015	1	Screw	2		
19	910200200026	1	Screw	2		
20	910400500004	1	Spring Washer	2		
21	910400100004	1	Flat Washer	2		
22	505618020026	2	Mounting Plate	1		
23	505618020027	2	Mounting Plate	1		
24	505633510002	2	Proximity Switch	1		
25	505618020017	2	Pin	1		
26	910200400005	1	Screw	1		
27	505618020024	2	Cam	1		
28	509818010001	2	Mounting Base	1		
29	910400500005	1	Spring Washer	6		
30	910200300017	1	Screw	6		

Chapter 7: Special Parts

01 Load Backrest (Optional) (532646040501)

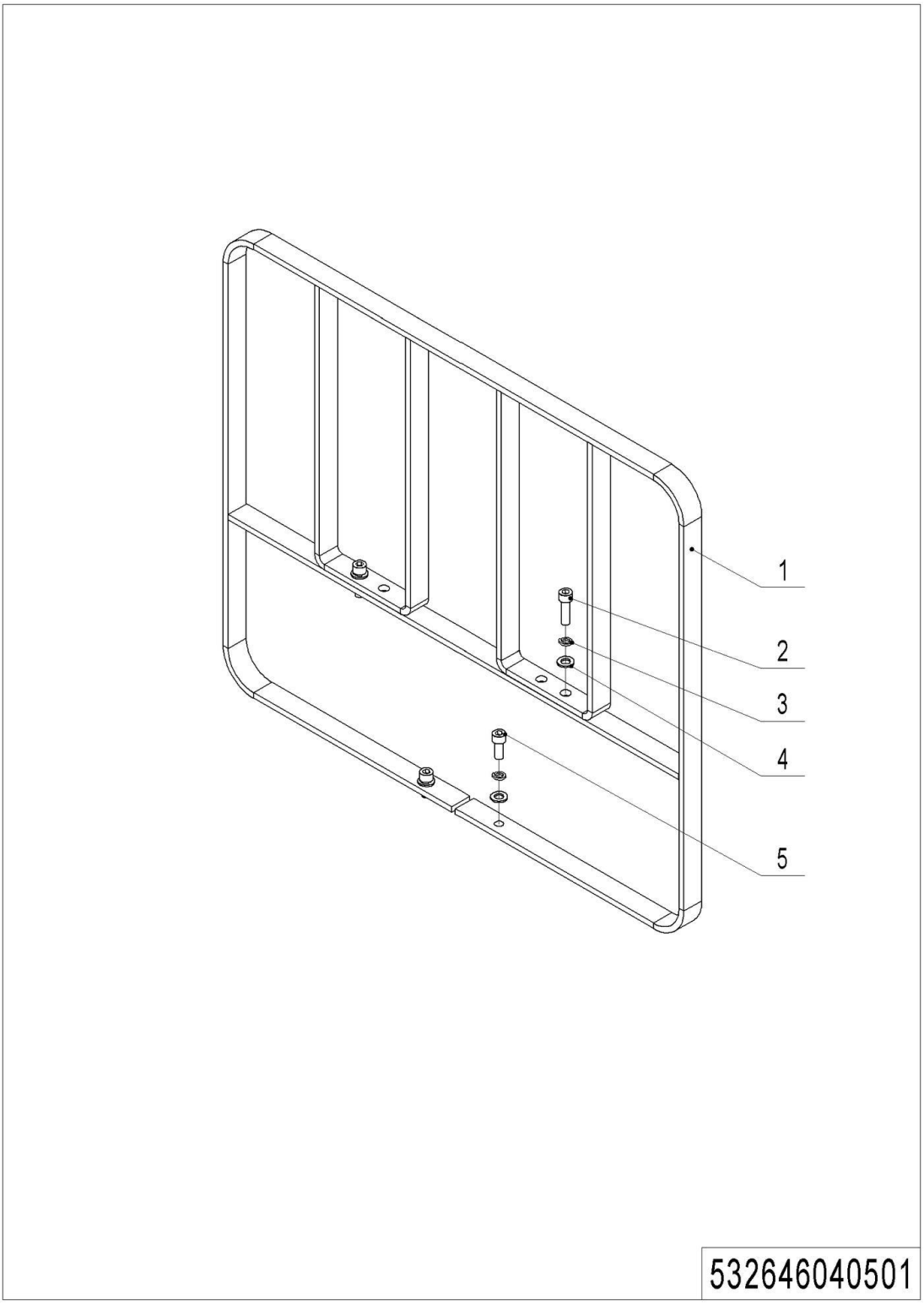

1= Supply as package. 2= Supply with constraints. 3= Phasing-out supply. 4= Supply as assembly. 5= Check other tables.

01 Load Backrest (Optional) (532646040501)

No.	Item Code	Mark	Item Description	Qty.	Substitute	Note
1	532640510001	2	Load Backrest	1		
2	910200200077	1	Screw	2		
3	910400500007	1	Spring Washer	4		
4	910400100007	1	Flat Washer	4		
5	910200200076	1	Screw	2		

Chapter 8: Others

01 Labels and Decals-EU (537246047001)

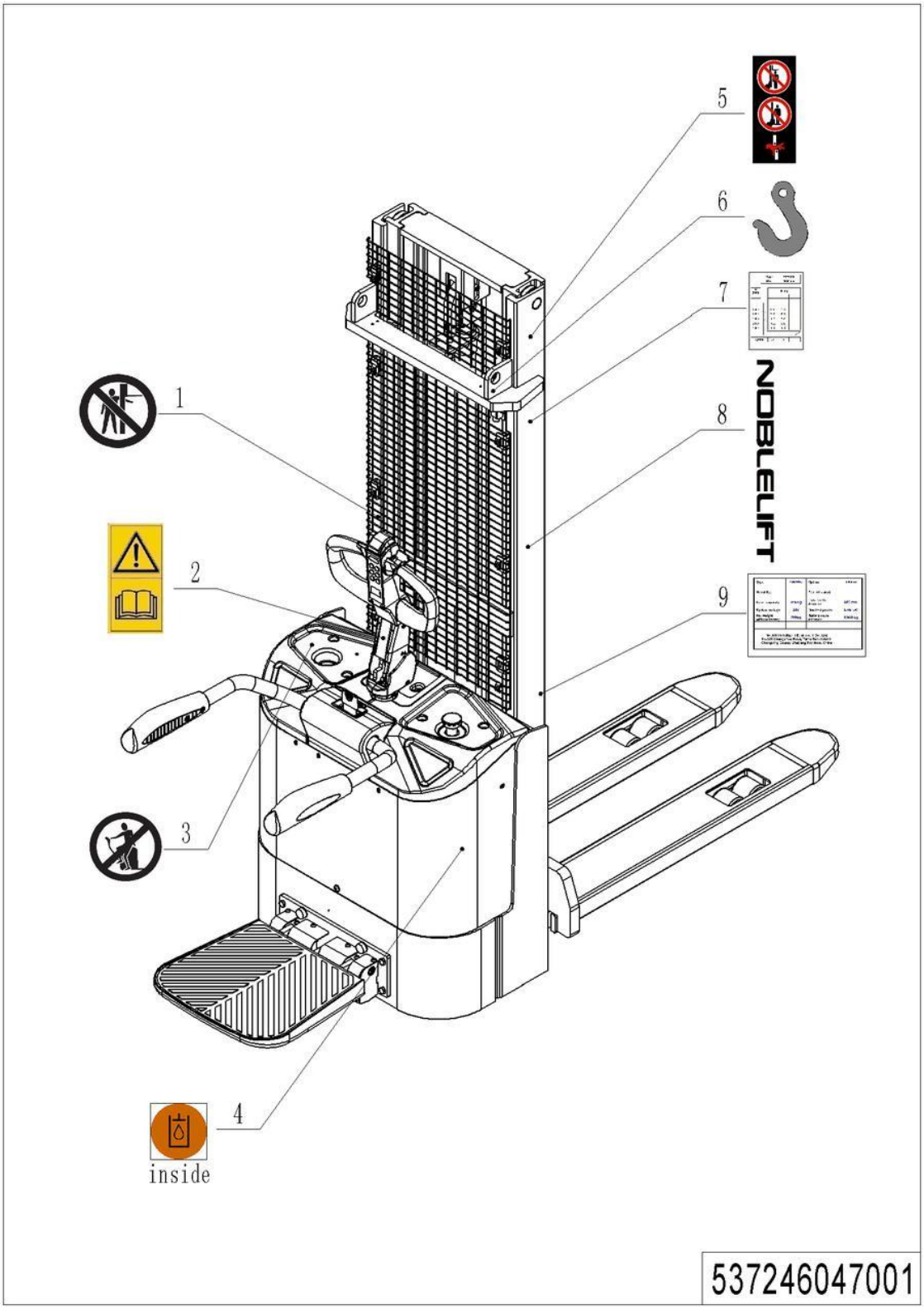

01 Labels and Decals-EU (537246047001)

No.	Item Code	Mark	Item Description	Qty.	Substitute	Note
1	941200100006	2	Label	1		
2	941200300002	2	Label	1		
3	941200100003	2	Label	1		
4	941200300003	2	Label	1		
5	941200100004	2	Label	2		
6	941200300001	2	Label	2		
7	537247520000	2	Load Capacity Diagram	1		
8	941200500001		Label	1		Depends On Customer
9	537247520016	2	Truck data plate	1		

02 Labels and Decals-US (537246047002)

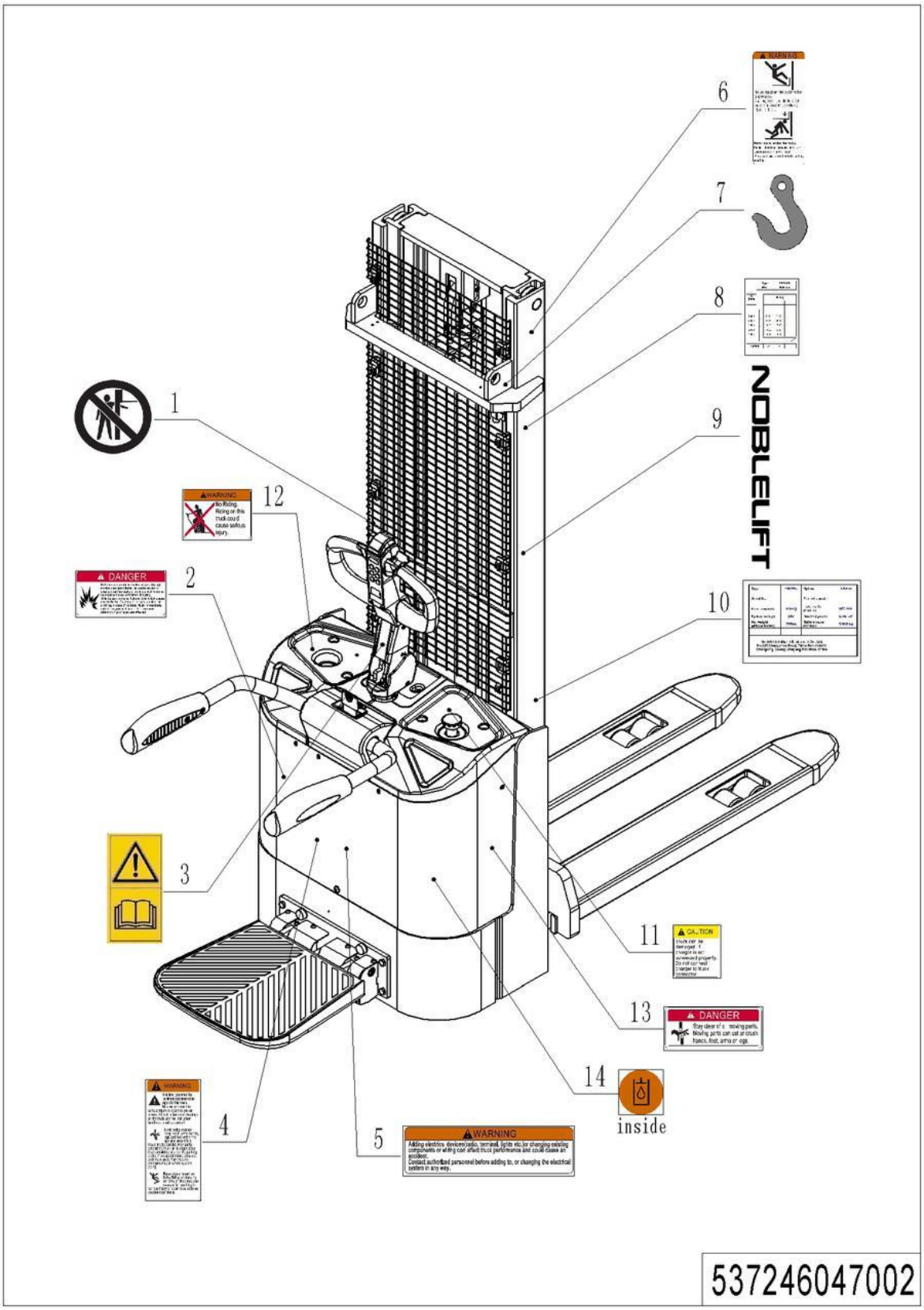

02 Labels and Decals-US (537246047002)

No.	Item Code	Mark	Item Description	Qty.	Substitute	Note
1	941200100006	2	Label	1		
2	941200100013	2	Label	1		
3	941200300002	2	Label	1		
4	941200100009	2	Label	1		
5	941200100010	2	Label	1		
6	941200100016	2	Label	1		
7	941200300001	2	Label	2		
8	537247520000	2	Load Capacity Diagram	1		
9	941200500001		Label	1		Depends On Customer
10	537247520016	2	Truck data plate	1		
11	941200100012	2	Label	1		
12	941200100011	2	Label	1		
13	941200100014	2	Label	1		
14	941200300003	2	Label	1		Chapter

Appendix

01 Electrical Circuit Diagram (537246045501)

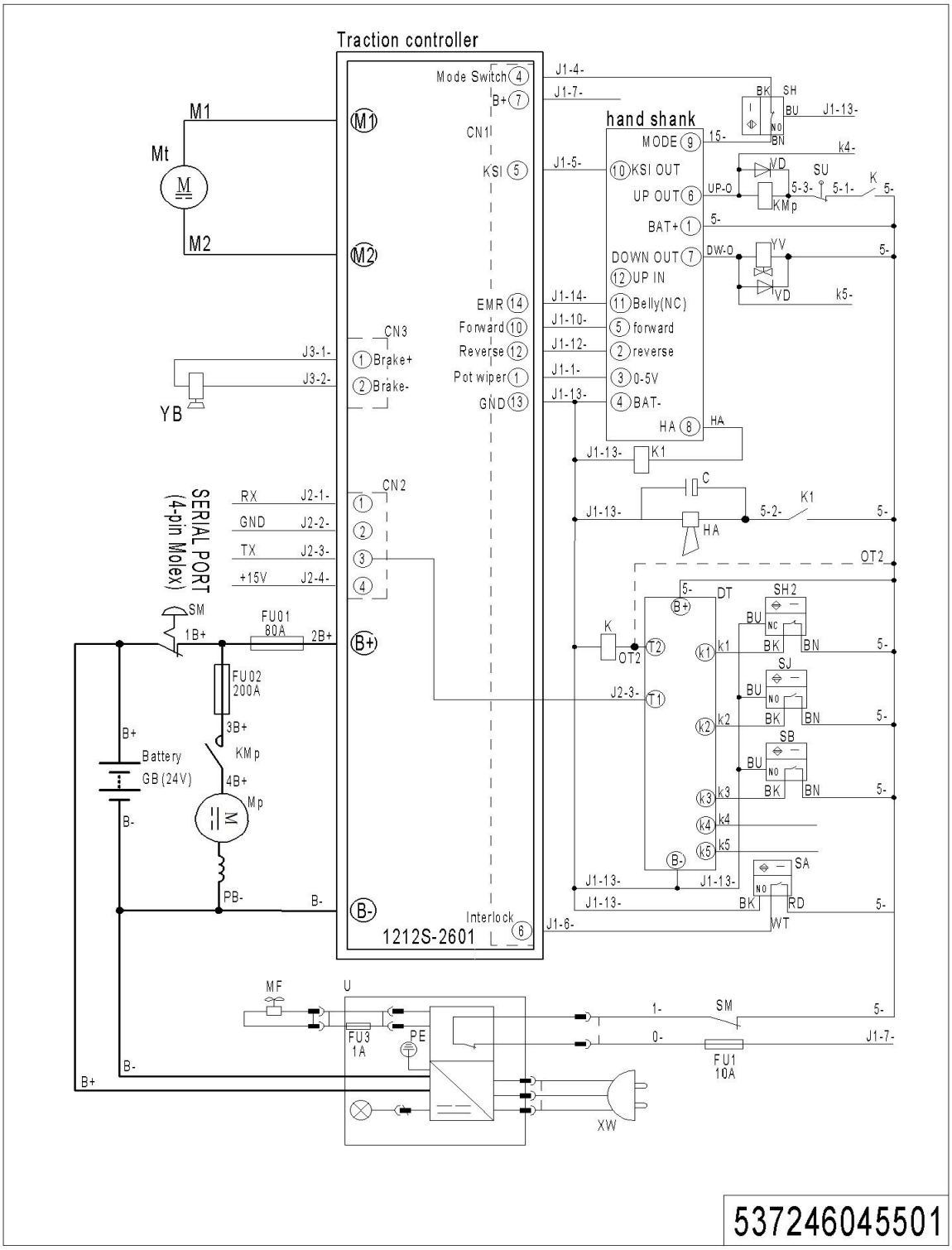

02 Hydraulic Circuit Diagram (537046045504)

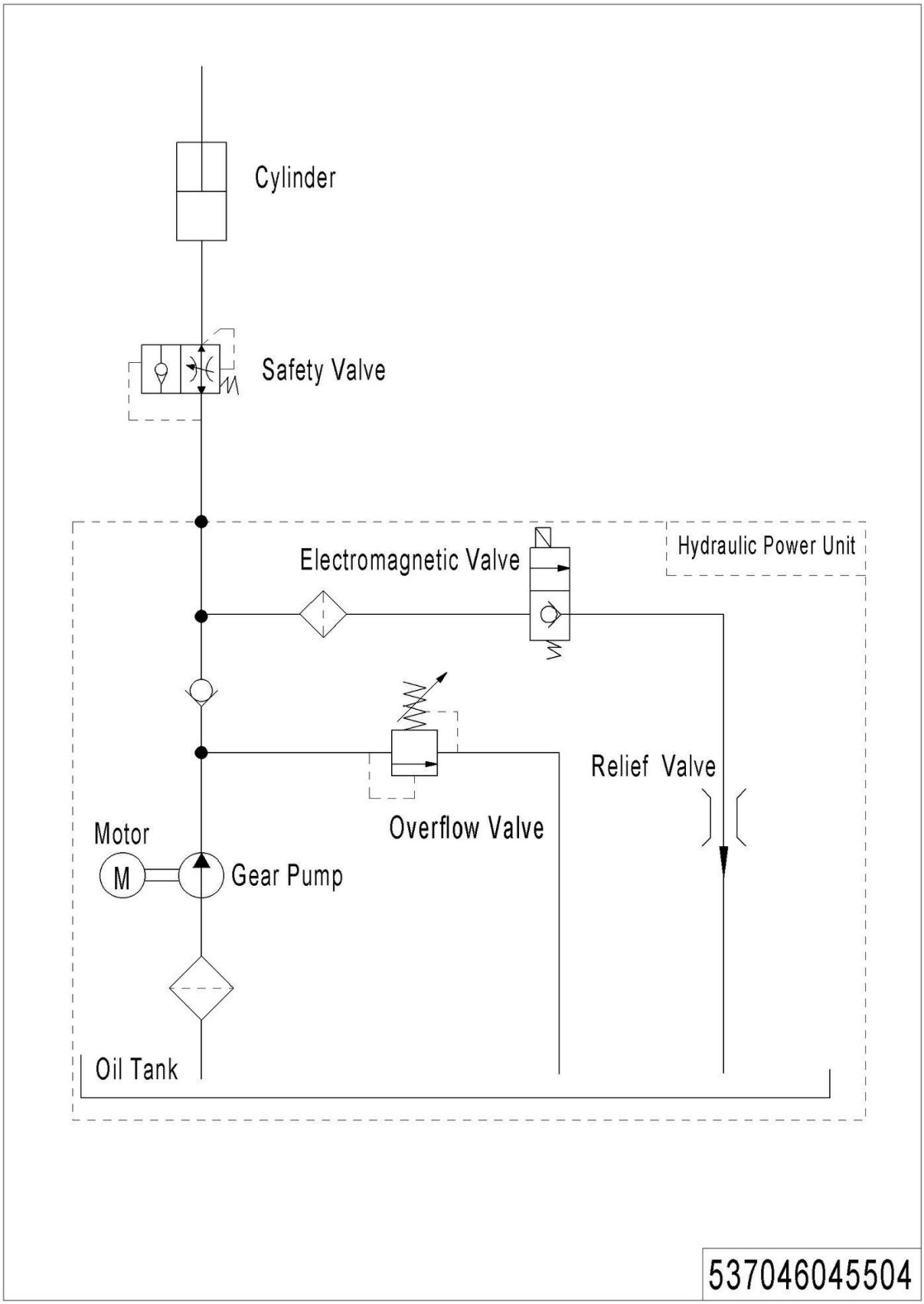

03 Consumable Parts List

No.	Item Code	Item Description	Qty.	Chapter/ Section/ Number
1	910700200008	Bearing	1	Chapter1 /01/6
2	537098510015	Carbon Brush	1	Chapter1 /02/1.01
3	910700200053	Bearing	2	Chapter1 /02/3
4	532698510001	Seal Kit	1	Chapter2 /01/7
5	532298510026	Carbon Brush	1	Chapter2 /02/1.01
6	940400100044	Air Spring	1	Chapter 4/01/5
7	940500200002	Bushing	1	Chapter4 /01/10
8	910700200009	Bearing	1	Chapter 4/03/1
9	910700200007	Bearing	1	Chapter4 /03/10
10	502398510002	Wheel	4	Chapter4 /04/5
11	910700700011	Bearing	1	Chapter 4/05/8
12	532298510004	Caster Assembly	2	Chapter 4/05/10
13	920100100004	Fuse	1	Chapter 5/01/16.03
14	920100100008	Fuse	1	Chapter 5/01/16.02
15	920100200002	Fuse	1	Chapter 5/01/16.04
16	920800100011	Relay	2	Chapter 5/01/16.01
17	920200300001	Microswitch	1	Chapter3 /02/38 Chapter3 /03/34
18	920200400034	Proximity Switch	1	Chapter 4/01/18
19	920200400033	Proximity Switch	1	Chapter3 /02/39
20	920200400032	Proximity Switch	1	Chapter3 /02/45 Chapter 3/03/36
21	505633510001	Proximity Switch	2	Chapter6 /01/16
22	920200100001	Emergency Button	1	Chapter5/01/5
23	940400100006	Air Spring	1	Chapter6 /01/19
24	940500200008	Bushing	4	Chapter6/02/4
25	940400100039	Air Spring	1	Chapter6 /02/8

1= Supply as package. 2= Supply with constraints. 3= Phasing-out supply. 4= Supply as assembly. 5= Check other tables.