NOBLELIFT

Scan QR Code for More

Service Hotline: 836115

Electric Pallet Truck PWB-200

PARTS MANUAL

511646010101

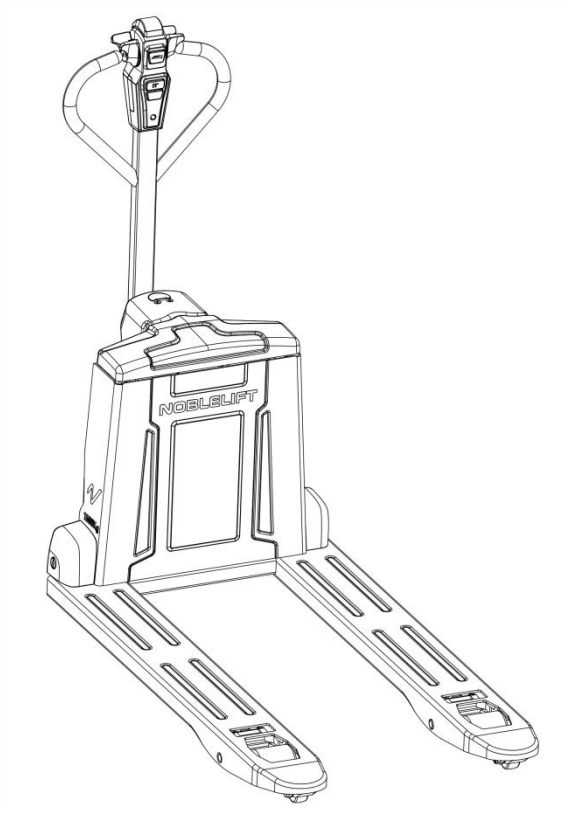

Version：V09

Truck Identification Number From：

Parts Manual

PWB-200-PM09EN

Please order spare parts from authorized dealers of Noblelift Intelligent Equipment Co., LTD.

In order to avoid wrong delivery, all the orders for spare parts should specify the following items:

- Truck model, identification number and manufacture year.
- Orders for spare parts of mast, hydraulic transmission unit, steering axle, motor, etc. shall indicate the manufacture number of these parts.
- Codes for Noblelift spare parts are shown in the table of parts manual. Please also pay attention to the description of supply status, order quantity, etc. (check the number listed in "Mark" column of the parts manual).

"Mark" Column:

The unmarked indicates the parts are in short supply cycle.

Number 1: supply as package. Indicating these that parts are small parts and seal parts, which are supplied in package unit and in short supply cycle.

Number 2: supply with constraints. Indicating that these spare parts are not in stock and will be prepared for production after receiving the order from customers, which are in long supply cycle.

Number 3: phasing-out supply. Indicating that these parts will be replaced by new parts due to technical improvements and the current stock will not be available when these parts run out. Please check the description of technical improvements notice.

Number 4: supply as assembly. Indicating that these parts are assembly parts defined by manufacture process, which cannot be supplied as a single part.

Number 5: check other tables.

This parts manual is the property of Noblelift and can be shared under the confidential agreement only, Noblelift has the right to claim for compensation of any unauthorized use. Copy without permission is not allowed. Figures in the manual are not limited by the original design. Noblelift Intelligent Equipment Co., LTD reserves the right to improve the products for continuous technology progress.

Table of Contents

Chapter 1: Drive System 1
01 Drive Unit Steering(511646013501) 1
02 Drive Assembly(YX)(511646013501) 3
Chapter 2: Hydraulic System 5
01 Hydraulic Components Type A(511646023502) 5
02 Hydraulic Components Type B(511646023503) 7
Chapter 3: Truck Frame 9
01 Truck Frame (511646038501) 9
02 Truck Frame (511646038502) 11
Chapter 4: Steering System, Braking System, Wheels 13
01 Tiller Unit Type A(511646011001) 13
02 Tiller Unit Type B(511646011003) 15
03 Load Wheel (Tandem)(511846017001) 17
04 Caster (509946016504) 19
05 Caster (509946016501) 21
06 Caster Type B (509946016502) 23
Chapter 5: Electrical Parts 25
01 Wire Harness Type A (511646033001) 25
02 Wire Harness Type B (511646033002) 27
03 Electronic Components Type A (511646033003) 29
04 Electronic Components Type B (511646033004) 31
05 Charger (511646036501) 33
06 Traction Battery (511646037001) 35
Chapter 6: Others 37
01 Labels and Decals-EU (511646047003) 37
02 Labels and Decals-US (511646047004) 39
03 Labels and Decals-EU Type B (511646047005) 41
04 Labels and Decals-US Type B (511646047006) 43
Appendix 45
01 Electrical Circuit Diagram Type A (511646045501) 45
02 Electrical Circuit Diagram Type B (511646045502) 46
03 Electrical Circuit Diagram (508046045502) 47
04 Consumable Parts List 48

Chapter 1: Drive System

01 Drive Unit Steering(511646013501)

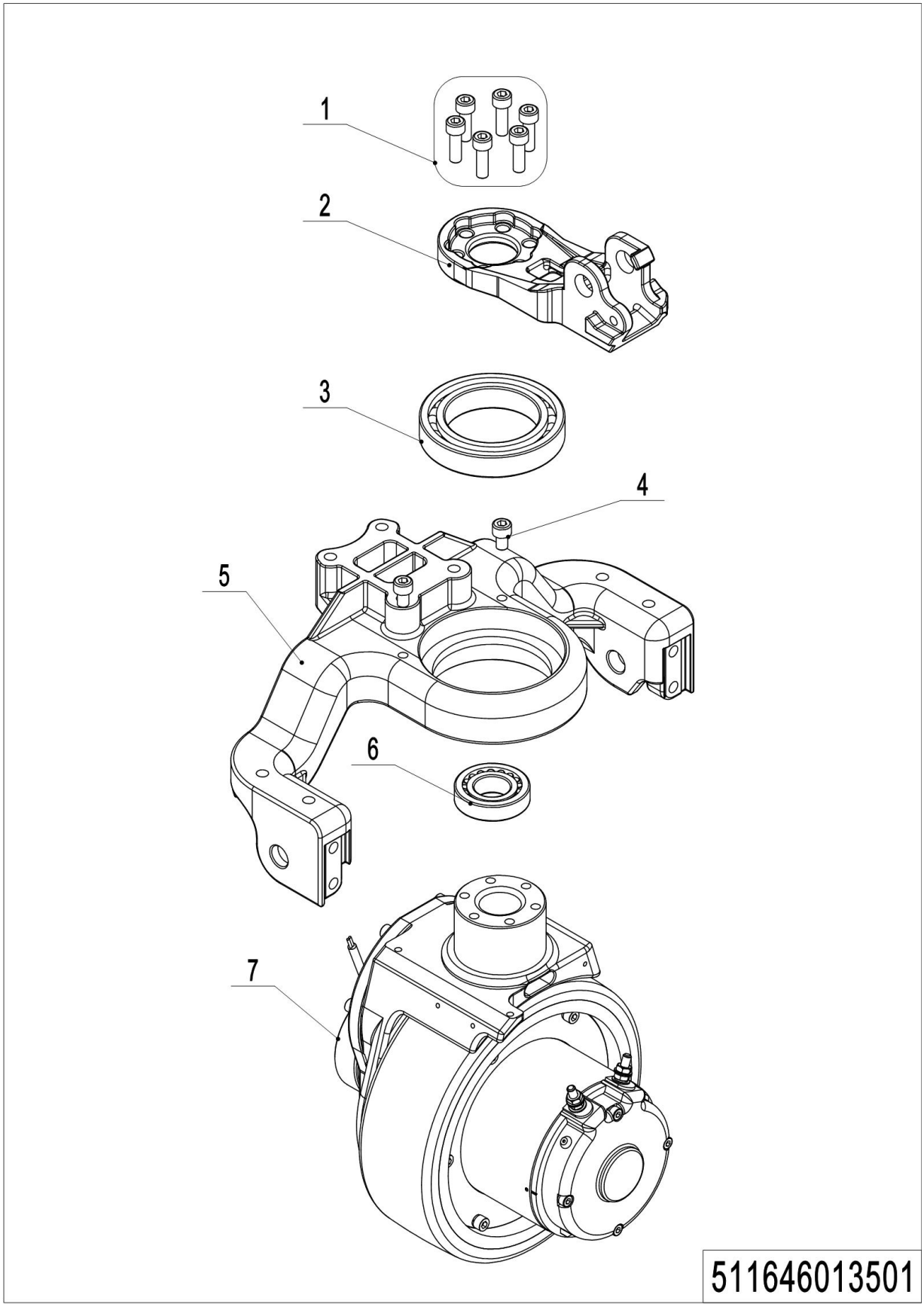

01 Drive Unit Steering(511646013501)

No.	Item Code	Mark	Item Description	Qty.	Substitute	Note
1	910200200058	1	Screw	6		
2	509913520004		Flange	1		
3	910700200058		Bearing	1		
4	910200200074	1	Screw	2		
5	511813520001		Wheel Mount	1		
6	910700600044		Bearing	1		
7	940900100055	1	Drive Unit	1		YX

02 Drive Assembly(YX)(511646013501)

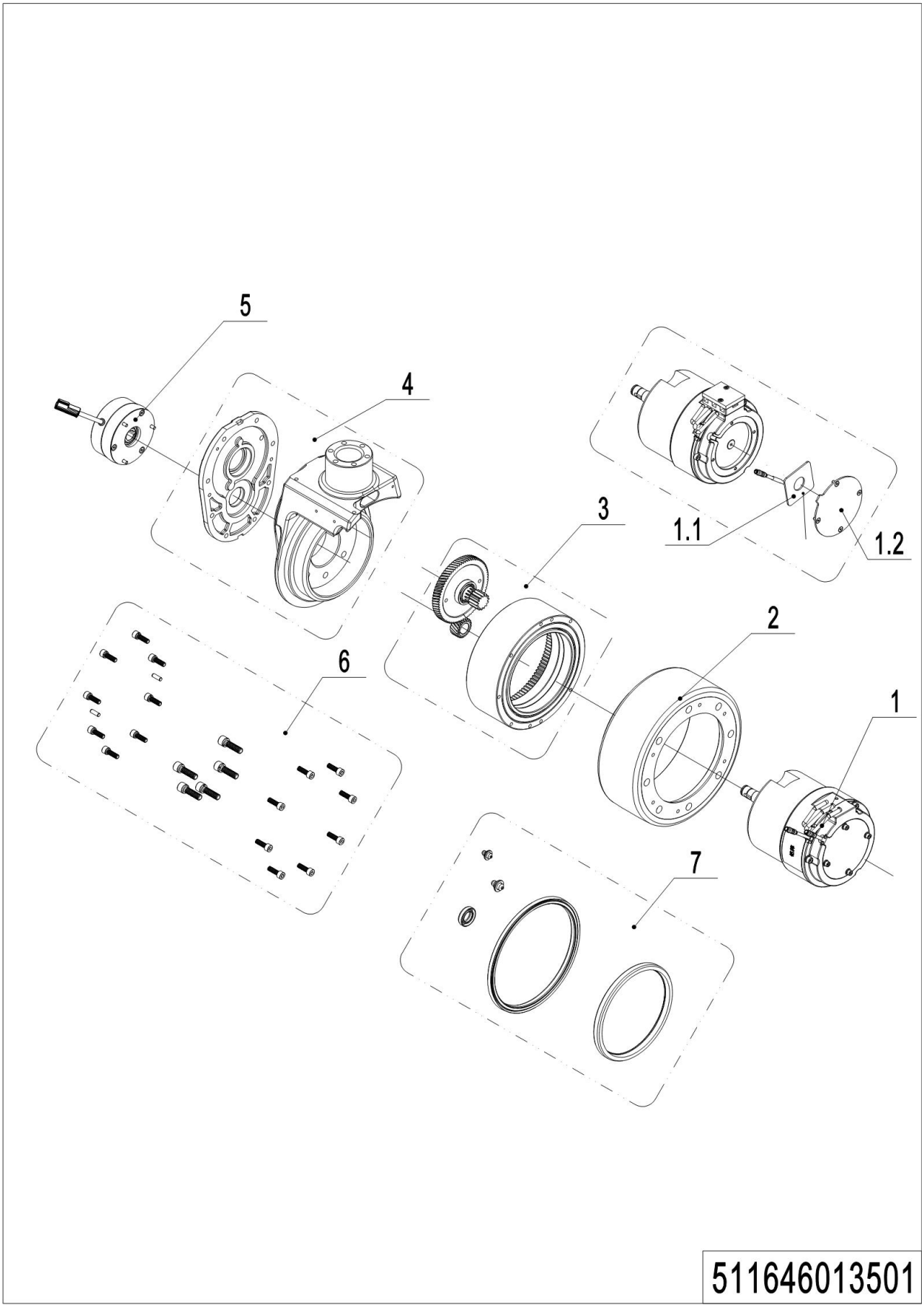

1= Supply as package. 2= Supply with constraints. 3= Phasing-out supply. 4= Supply as assembly. 5= Check other tables.

02 Drive Assembly(YX)(511646013501)

No.	Item Code	Mark	Item Description	Qty.	Substitute	Note
1	961007400001		Motor	1		
1.1	961005700002		Hall sensor	4		
1.2	961005700003		Protective cove	1		
2	961004000009		Drive Wheel	1		
3	511898510008		Gear Bearing Assembly	1		
4	509998510051		Gearbox Housing Assembly	8		
5	961002200004		Electromagnetic Brake	2		
6	511898510004		Screw Fastener Kit	1		
7	511898510005		Sealing Component Kit	1		

Chapter 2: Hydraulic System

01 Hydraulic Components Type A(511646023502)

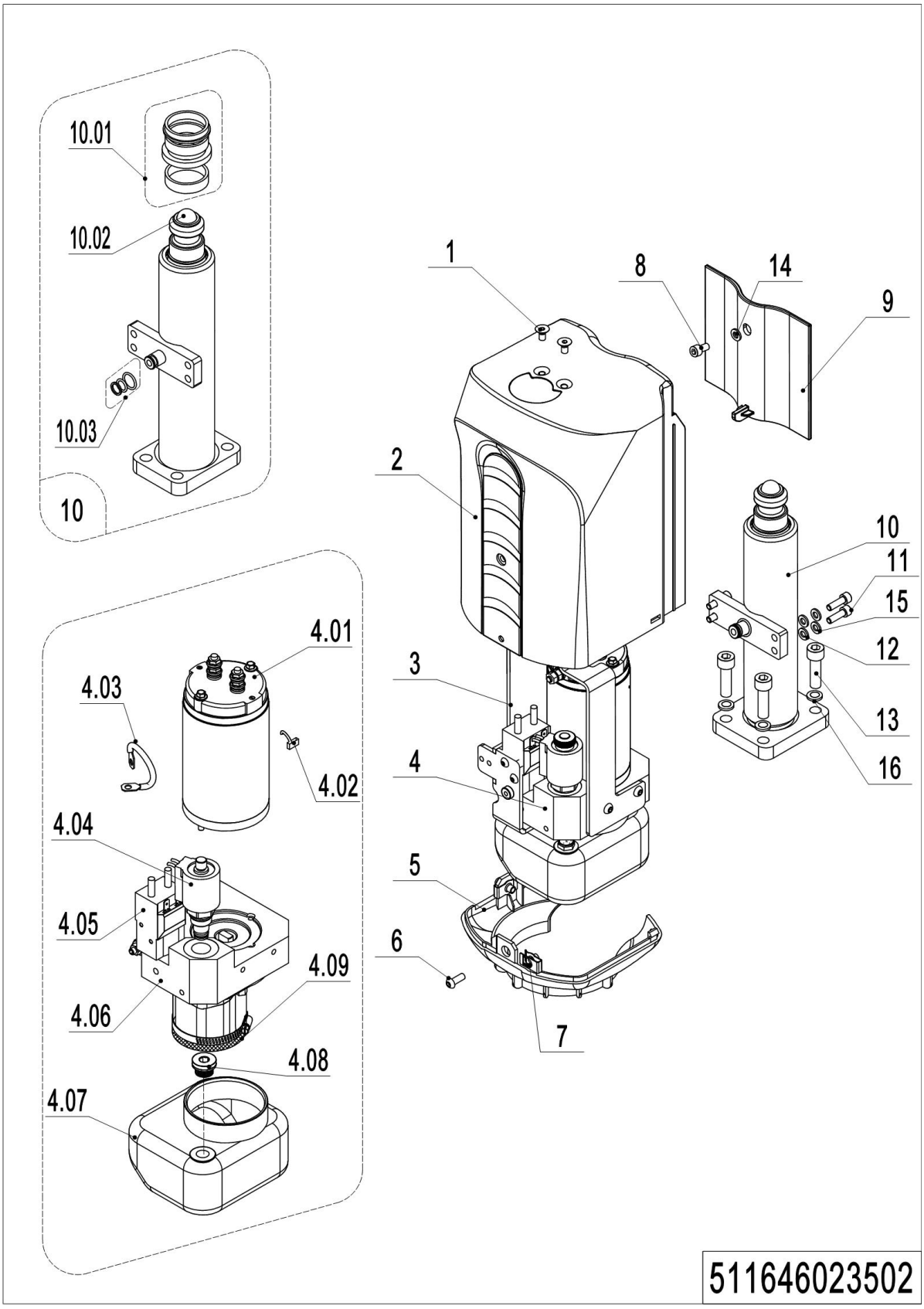

01 Hydraulic Components Type A(511646023502)

No.	Item Code	Mark	Item Description	Qty.	Substitute	Note
1	910200400015	1	Screw	2		
2	509924020105		Cover	1		
3	511824010000		Mounting Rack	1		
4	950900100057	2	Pump Unit	1		
4.01	508598510007	2	Motor	1		
4.02	508598520014	2	Brush	1		
4.03	508598520001	2	Cables	1		
4.04	505698520054	2	Magnetic Valve	1		
4.05	508598520011	2	Switch	1		
4.06	508598510008	2	Gear Pump	1		
4.07	508598510010	2	Tank	1		
4.08	508598510009	2	Filter	1		
4.09	508598520005	2	Sieve	1		
5	509924020102		Shield	1		
6	910200300018	1	Screw	5		
7	940400400001	1	Cage Nut	2		
8	910200200176	1	Screw	1		
9	509924020104		Cover	1		
10	511624001001		Cylinder	1		
10.01	509924010005		Seal Kit	1		
10.02	910701100019		Steel Ball	1		
10.03	508598510004		Seal Kit	1		
11	910200200038	1	Screw	4		
12	910400100005	1	Flat Washer	4		
13	910200200077	1	Screw	4		
14	509938520042	1	Washer	1		
15	910400500005		Spring Washer	4		
16	910400500007		Spring Washer	4		

02 Hydraulic Components Type B(511646023503)

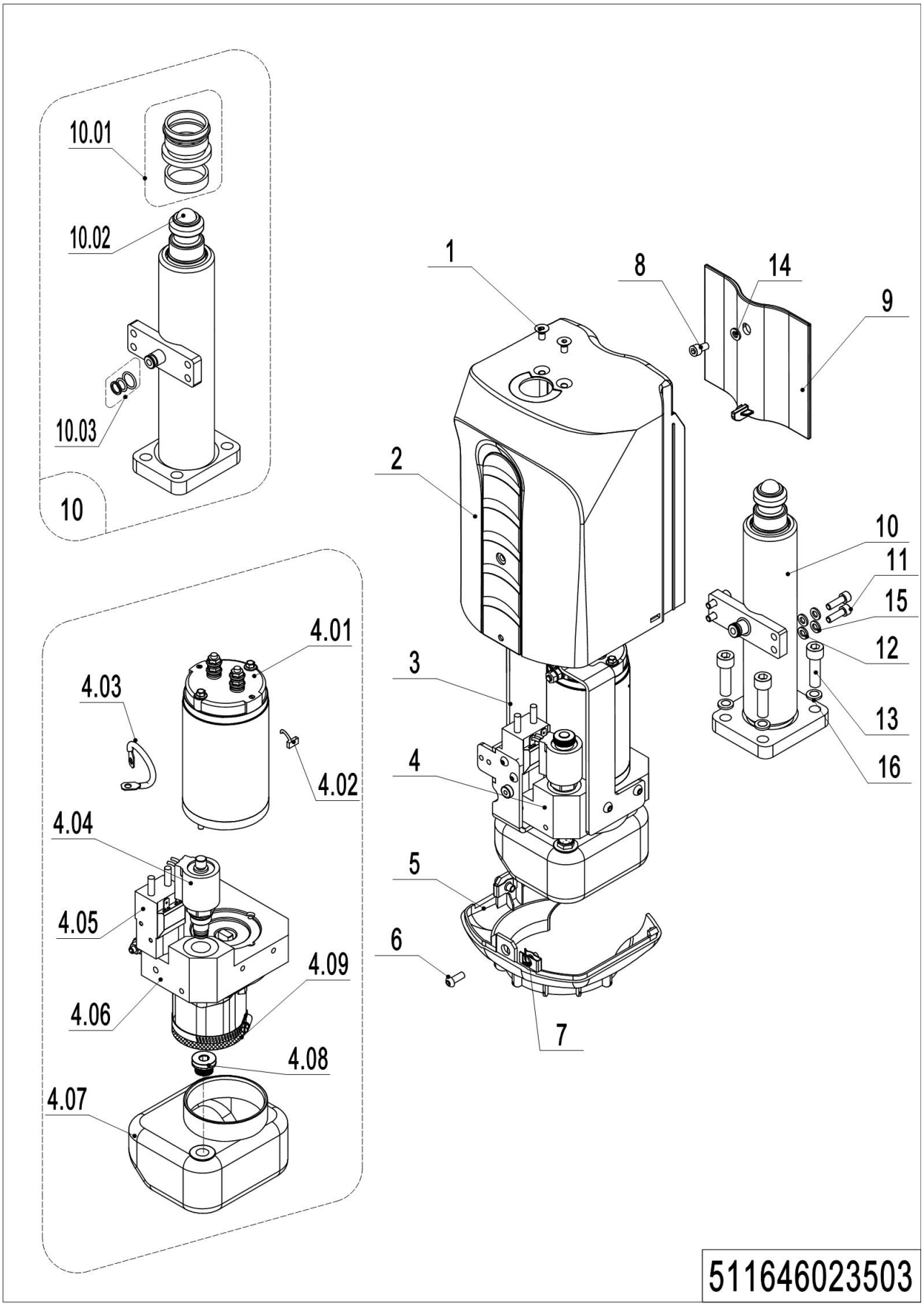

02 Hydraulic Components Type B(511646023503)

No.	Item Code	Mark	Item Description	Qty.	Substitute	Note
1	910200400015	1	Screw	2		
2	509924020105		Cover	1		
3	511824010000		Mounting Rack	1		
4	950900100057	2	Pump Unit	1		
4.01	508598510007	2	Motor	1		
4.02	508598520014	2	Brush	1		
4.03	508598520001	2	Cables	1		
4.04	505698520054	2	Magnetic Valve	1		
4.05	508598520011	2	Switch	1		
4.06	508598510008	2	Gear Pump	1		
4.07	508598510010	2	Tank	1		
4.08	508598510009	2	Filter	1		
4.09	508598520005	2	Sieve	1		
5	509924020102		Shield	1		
6	910200300018	1	Screw	5		
7	940400400001	1	Cage Nut	2		
8	910200200176	1	Screw	1		
9	509924020104		Cover	1		
10	511624001001		Cylinder	1		
10.01	509924010005		Seal Kit	1		
10.02	910701100019		Steel Ball	1		
10.03	508598510004		Seal Kit	1		
11	910200200038	1	Screw	4		
12	910400100005	1	Flat Washer	4		
13	910200200077	1	Screw	4		
14	509938520042	1	Washer	1		
15	910400500005		Spring Washer	4		
16	910400500007		Spring Washer	4		

1= Supply as package. 2= Supply with constraints. 3= Phasing-out supply. 4= Supply as assembly. 5= Check other tables.

Chapter 3: Truck Frame

01 Truck Frame (511646038501)

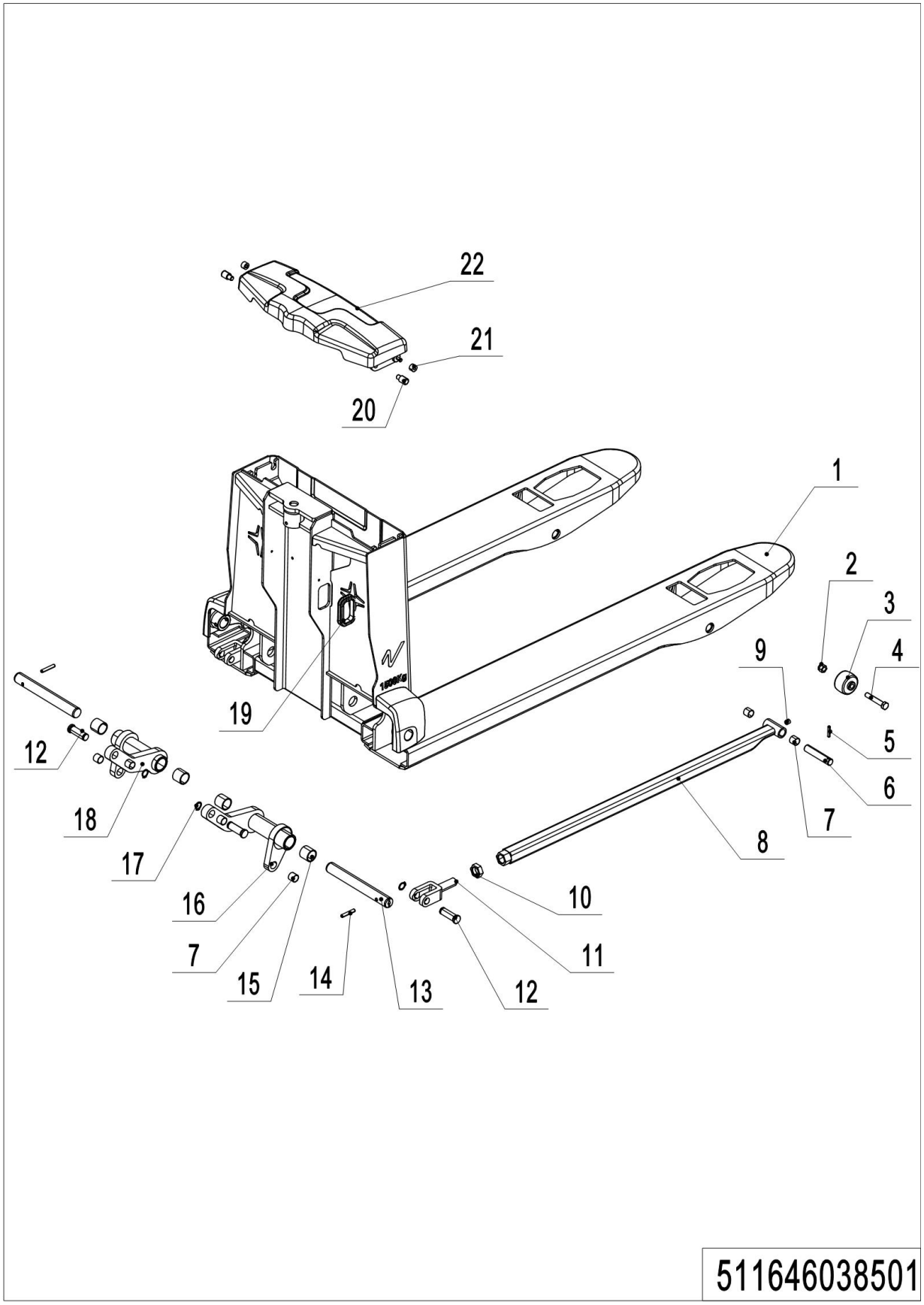

01 Truck Frame (511646038501)

No.	Item Code	Mark	Item Description	Qty.	Substitute	Note
1	511638510009		Chassis(685x1150)	1		
2	910300500005		Nut	2		
3	505638520039		Entry roller	2		
4	941100200019		Nut	1		
5	910600500002		Coiled Elastic Cylinder	4		
6	502338520030		Axle	2		
7	940500100083		Bushing	8		
8	509938510002		Push Rod Kit(1150)	2		
9	911200100001		Oil Cup	2		
10	910300400008		Nut	2		
11	502338520027		Push Rod Fork	2		
12	502338520026		Pin	4		
13	510838520104		Axle	2		
14	910600400041		Spring Pin	2		
15	940500100097		Bushing	4		
16	511638510014		Rise Arm	1		
17	910401300007		Circlip	4		
18	511638510015		Rise Arm	1		
19	509938520041		Jacket	1		
20	505621020003		Damping	2		
21	505621020004		Cushion	2		
22	511838510002		Weld	1		

02 Truck Frame (511646038502)

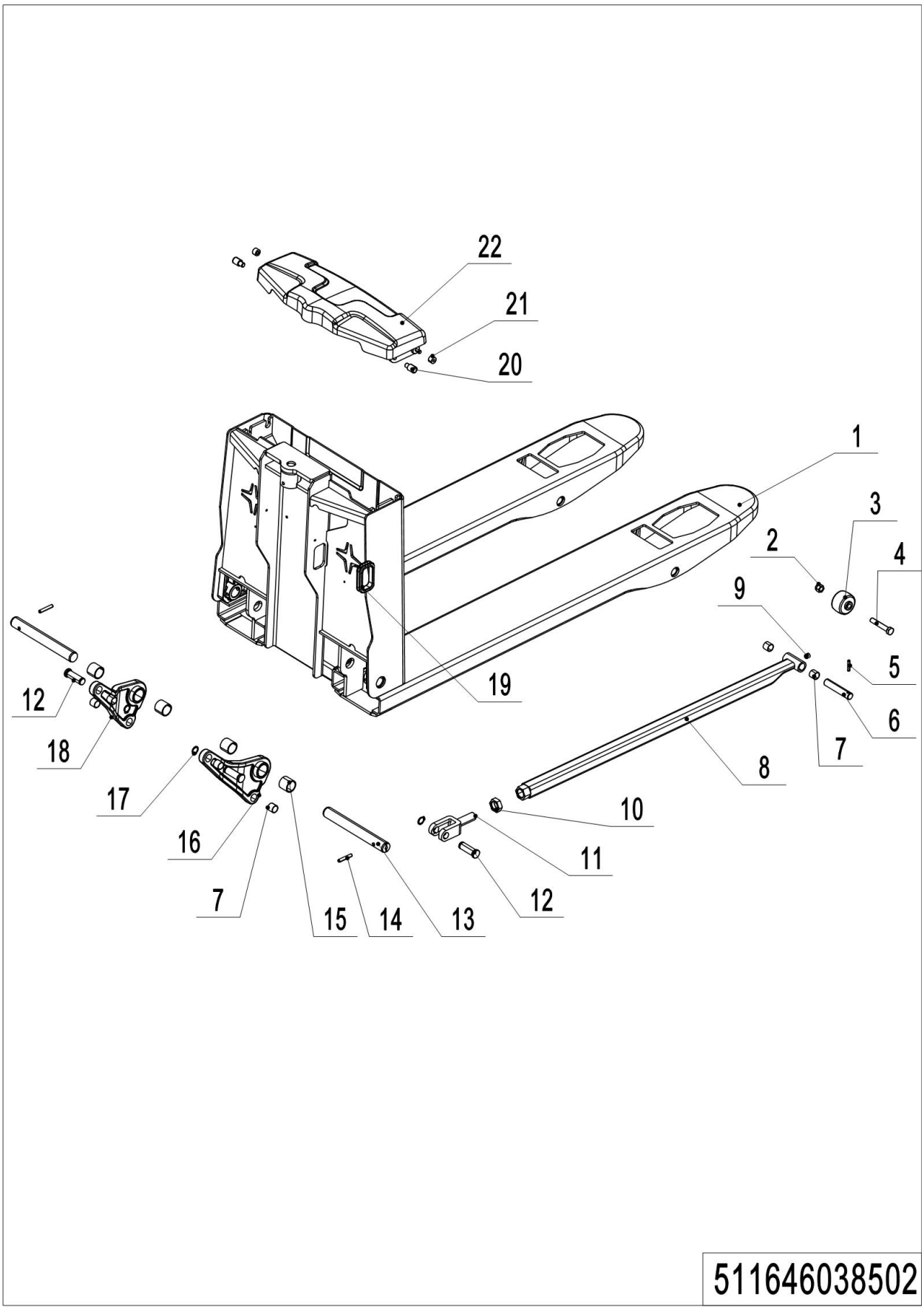

1= Supply as package. 2= Supply with constraints. 3= Phasing-out supply. 4= Supply as assembly. 5= Check other tables.

02 Truck Frame (511646038502)

No.	Item Code	Mark	Item Description	Qty.	Substitute	Note
1	511638510008		Chassis(540x1150)	1		
2	910300500005		Nut	2		
3	505638520039		Entry roller	2		
4	941100200019		Nut	1		
5	910600500002		Coiled Elastic Cylinder	4		
6	502338520030		Axle	2		
7	940500100083		Bushing	8		
8	509938510002		Push Rod Kit(1150)	2		
9	911200100001		Oil Cup	2		
10	910300400008		Nut	2		
11	502338520027		Push Rod Fork	2		
12	502338520026		Pin	4		
13	511838520019		Axle	2		
14	910600400041		Spring Pin	2		
15	940500100097		Bushing	4		
16	510838510002		Rise Arm	1		
17	910401300007		Circlip	4		
18	510838510003		Rise Arm	1		
19	509938520041		Jacket	1		
20	505621020003		Damping	2		
21	505621020004		Cushion	2		
22	511838510002		Weld	1		

Chapter 4: Steering System, Braking System, Wheels

01 Tiller Unit Type A(511646011001)

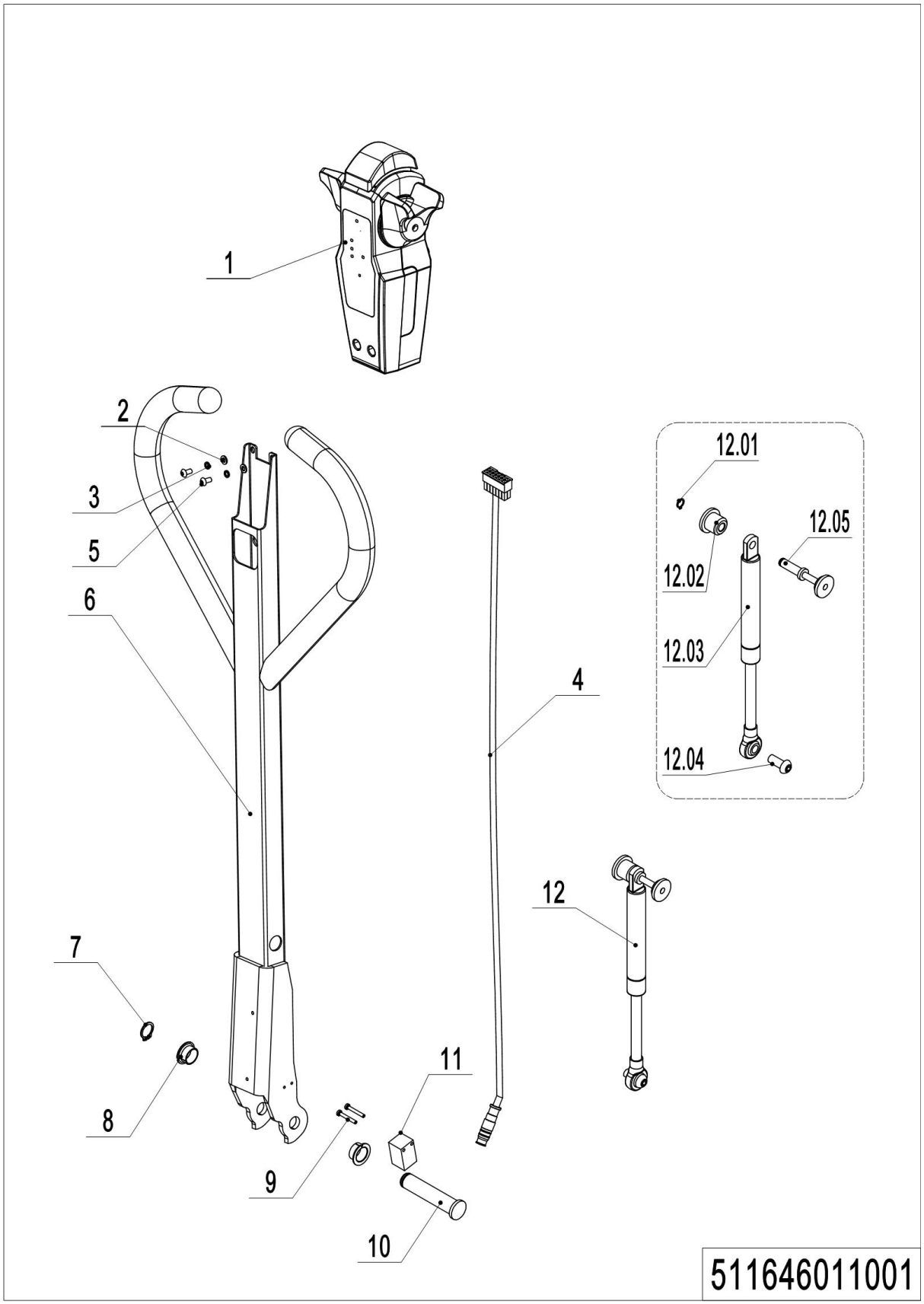

01 Tiller Unit Type A(511646011001)

No.	Item Code	Mark	Item Description	Qty.	Substitute	Note
1	922100100316	2	Tiller	1		
2	910400100004	1	Flat Washer	2		
3	910400500004	1	Spring Washer	2		
4	511833010022		Wire Harness	1		
5	910200300011	1	Screw	2		
6	511211010002		Welding of handle rod	1		
7	910401300006	1	Circlip	1		
8	940500200001		Bushing	2		
9	941101100001	1	Screw	2		
10	508011020004		Pin	1		
11	920200400026		Proximity Switch	1		
12	511898510009		Gas Spring Kit	1		
12.1	910401300001	1	Circlip	1		
12.2	508011020005		Fixing Base	1		
12.3	511811020001		Gas Spring	1		
12.4	941100100011	1	Screw	1		
12.5	508011010002		Pin	1		

02 Tiller Unit Type B(511646011003)

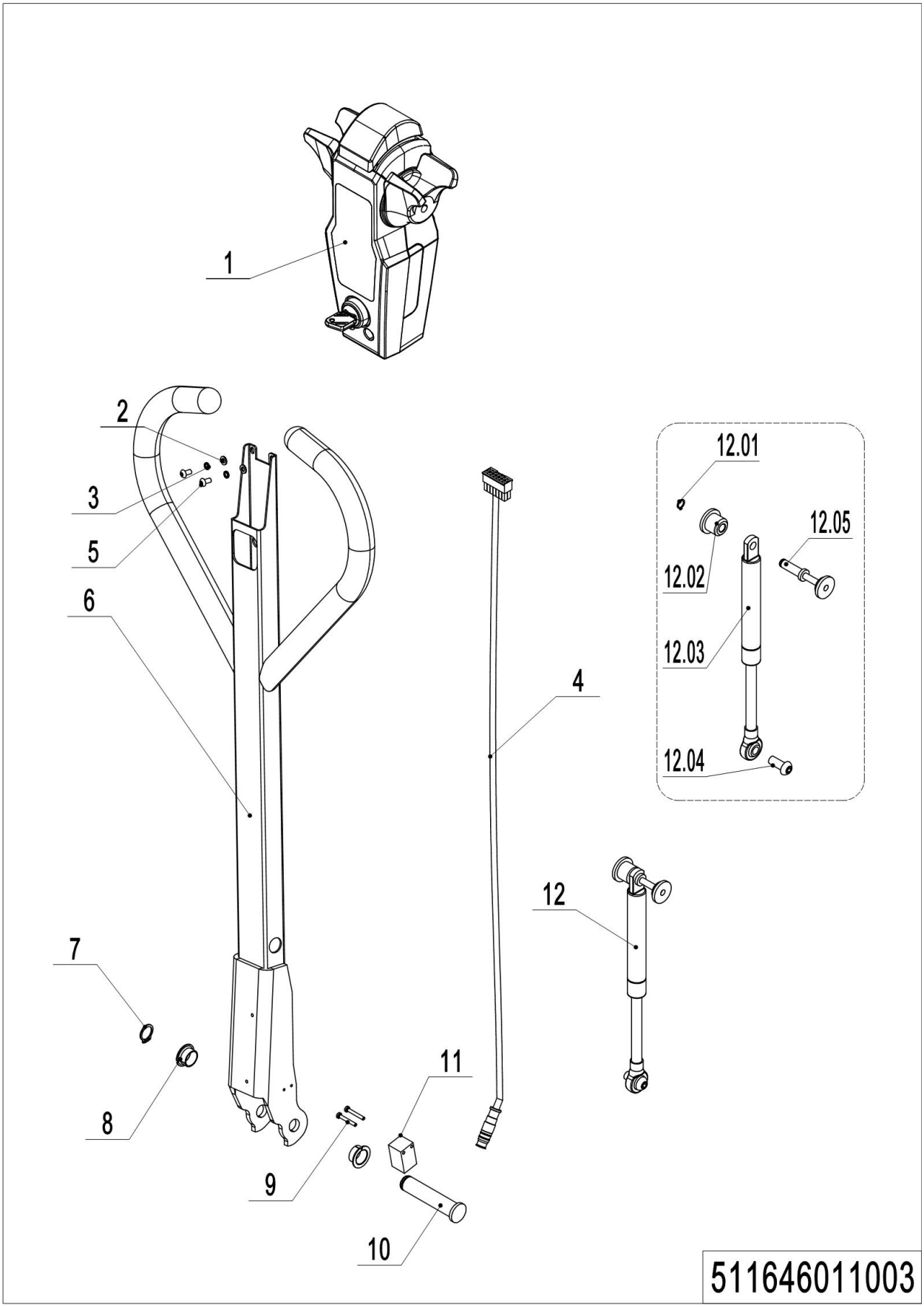

1= Supply as package. 2= Supply with constraints. 3= Phasing-out supply. 4= Supply as assembly. 5= Check other tables.

02 Tiller Unit Type B(511646011003)

No.	Item Code	Mark	Item Description	Qty.	Substitute	Note
1	922100100317	2	Tiller	1		
2	910400100004	1	Flat Washer	2		
3	910400500004	1	Spring Washer	2		
4	511833010022		Wire Harness	1		
5	910200300011	1	Screw	2		
6	511211010002		Welding of handle rod	1		
7	910401300006	1	Circlip	1		
8	940500200001		Bushing	2		
9	941101100001	1	Screw	2		
10	508011020004		Pin	1		
11	920200400026		Proximity Switch	1		
12	511898510009		Gas Spring Kit	1		
12.1	910401300001	1	Circlip	1		
12.2	508011020005		Fixing Base	1		
12.3	511811020001		Gas Spring	1		
12.4	941100100011	1	Screw	1		
12.5	508011010002		Pin	1		

03 Load Wheel (Tandem)(511846017001)

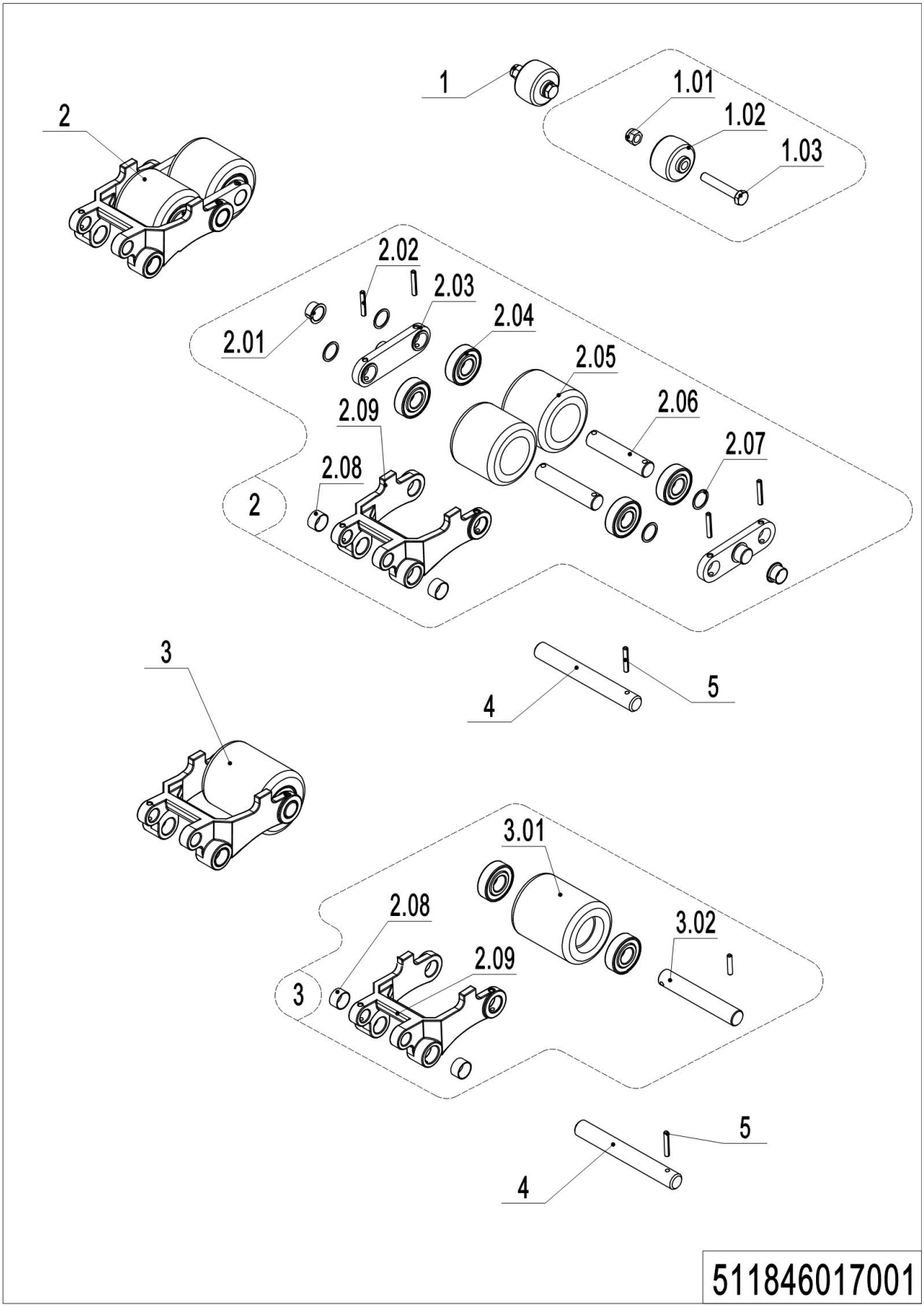

1= Supply as package. 2= Supply with constraints. 3= Phasing-out supply. 4= Supply as assembly. 5= Check other tables.

03 Load Wheel (Tandem)(511846017001)

No.	Item Code	Mark	Item Description	Qty.	Substitute	Note
1	502398510003		Pulley components	2		
1.01	910300500005	1	Nut	2		
1.02	505638520039		Running Pulley	2		
1.03	941100200019	1	Bolt	2		
2	511817001000		Wheel	2		
2.01	940500200038		Bushing	4		
2.02	910600400027	1	Spring Pin	8		
2.03	508017020001		Plate	4		
2.04	910700200019		Bearing	8/4		double /Single
2.05	511817020002		WheelΦ80x70	4		
2.06	511817020001		Axle	4		
2.07	940600500013		Washer	8/4		double /Single
2.08	940500100088		Bushing	4		
2.09	511838520017		Riser	2		
3	511817001001	2	Wheel	2		
3.01	511817020004		WheelΦ80x93	2		
3.02	511817020003		Axle	2		
4	508038520030		Pin	2		
5	910600400025		Spring Pin	2		

04 Caster (509946016504)

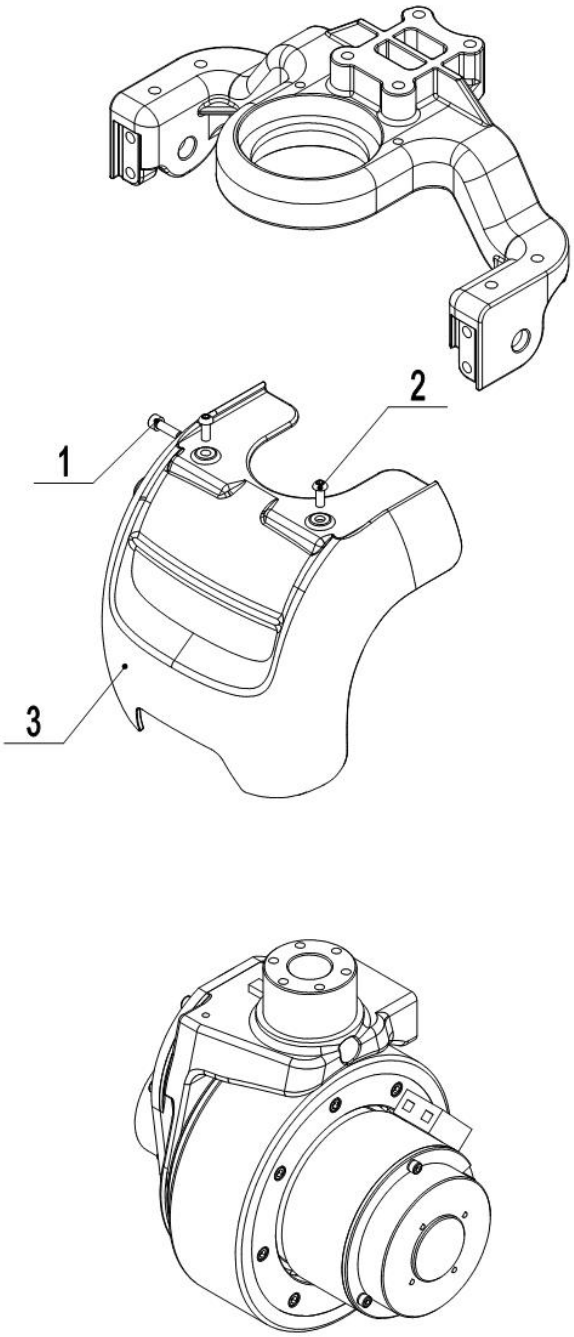

509946016504

1= Supply as package. 2= Supply with constraints. 3= Phasing-out supply. 4= Supply as assembly. 5= Check other tables.

04 Caster (509946016504)

No.	Item Code	Mark	Item Description	Qty.	Substitute	Note
1	910200200036	1	Screw	1		
2	910200300019	1	Screw	2		
3	509916520002		Apron	1		

05 Caster (509946016501)

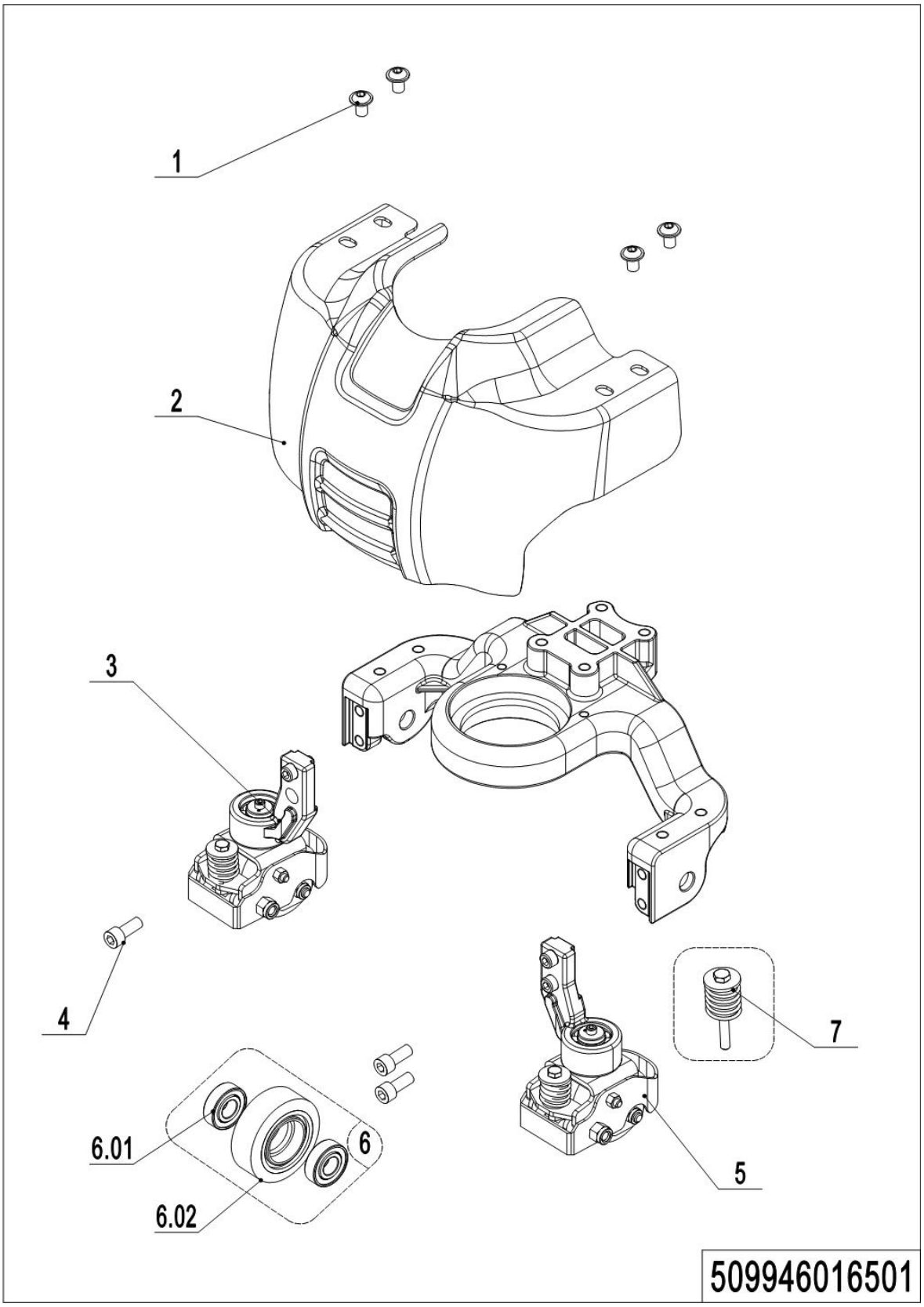

1= Supply as package. 2= Supply with constraints. 3= Phasing-out supply. 4= Supply as assembly. 5= Check other tables.

05 Caster (509946016501)

No.	Item Code	Mark	Item Description	Qty.	Substitute	Note
1	941100100005	1	Screw	4		
2	509916520001		Apron	1		
3	508016510002		Caster Assembly	1		
4	910200200076	1	Screw	4		
5	508016510005		Caster Assembly	1		
6	502398510015	2	Load Wheel Kit	2		
6.01	910700200018		Bearing	4		
6.02	940300300017		WheelΦ80x30	2		
7	508098510047		Spring Components	2		

06 Caster Type B (509946016502)

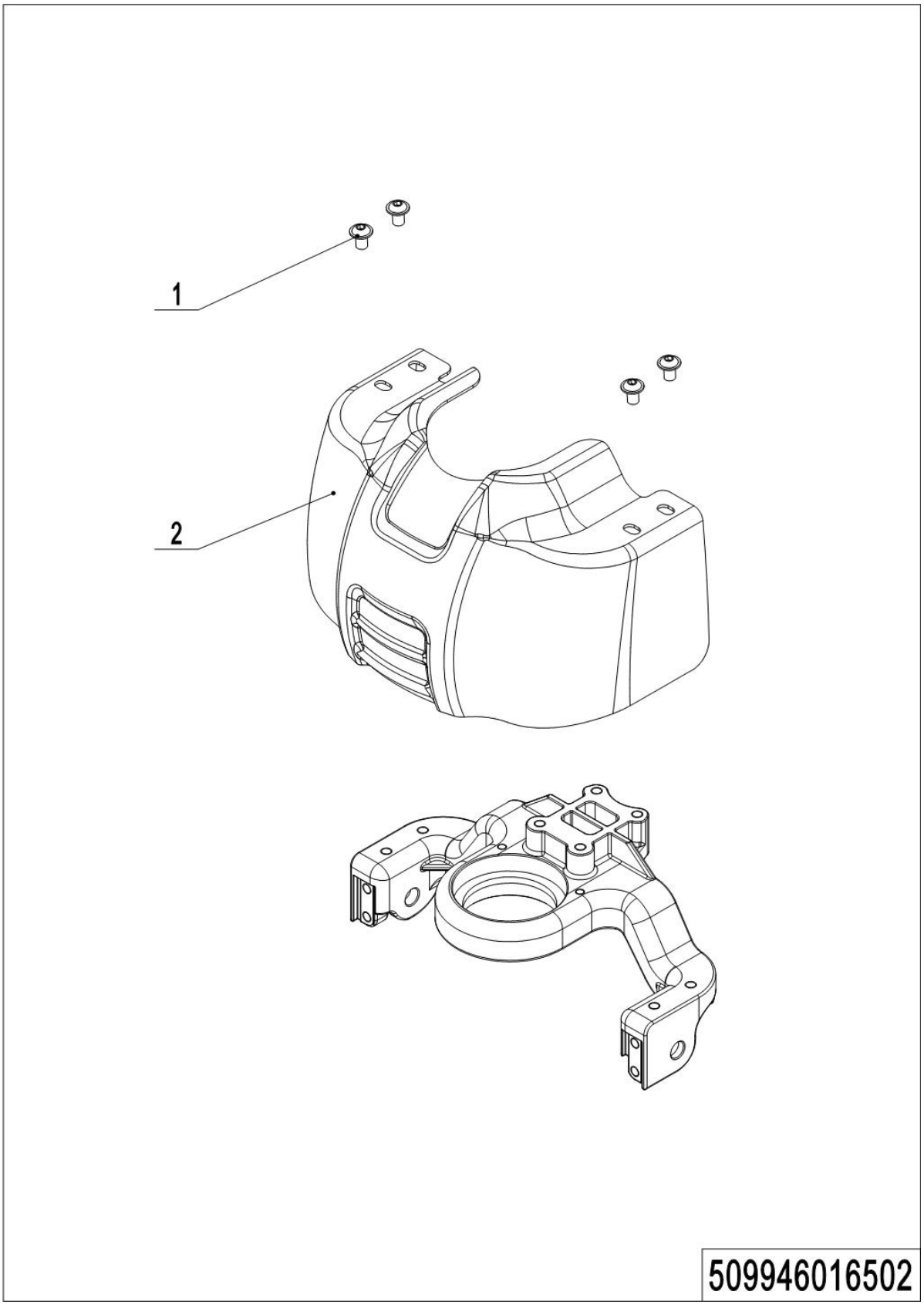

1= Supply as package. 2= Supply with constraints. 3= Phasing-out supply. 4= Supply as assembly. 5= Check other tables.

06 Caster Type B (509946016502)

No.	Item Code	Mark	Item Description	Qty.	Substitute	Note
1	941100100005	1	Screw	4		
2	509916520000		Apron	1		

Chapter 5: Electrical Parts

01 Wire Harness Type A (511646033001)

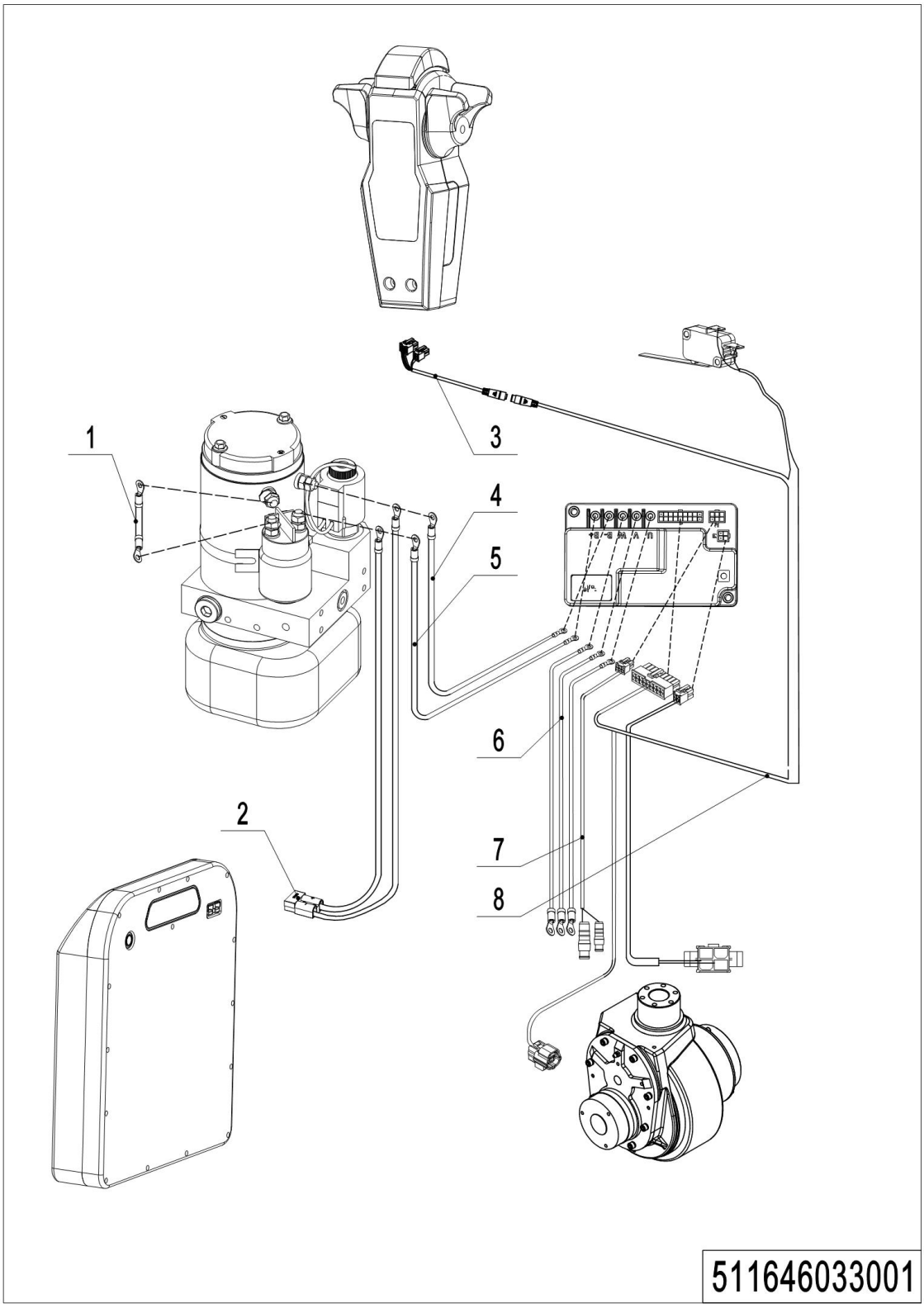

01 Wire Harness Type A (511646033001)

No.	Item Code	Mark	Item Description	Qty.	Substitute	Note
1	509933010012		Cables	1		
2	511633010007		Wire Harness	1		
3	511833010022		Wire Harness	1		
4	511633010003		Cables	1		B-
5	511633010002		Cables	1		B+
6	511633010004		Wire Harness	1		
7	511633010005		Wire Harness	1		
8	511633010001	3	Wire Harness	1	511633010015	Replace with 511833010022
8	511633010015		Wire Harness	1		

02 Wire Harness Type B (511646033002)

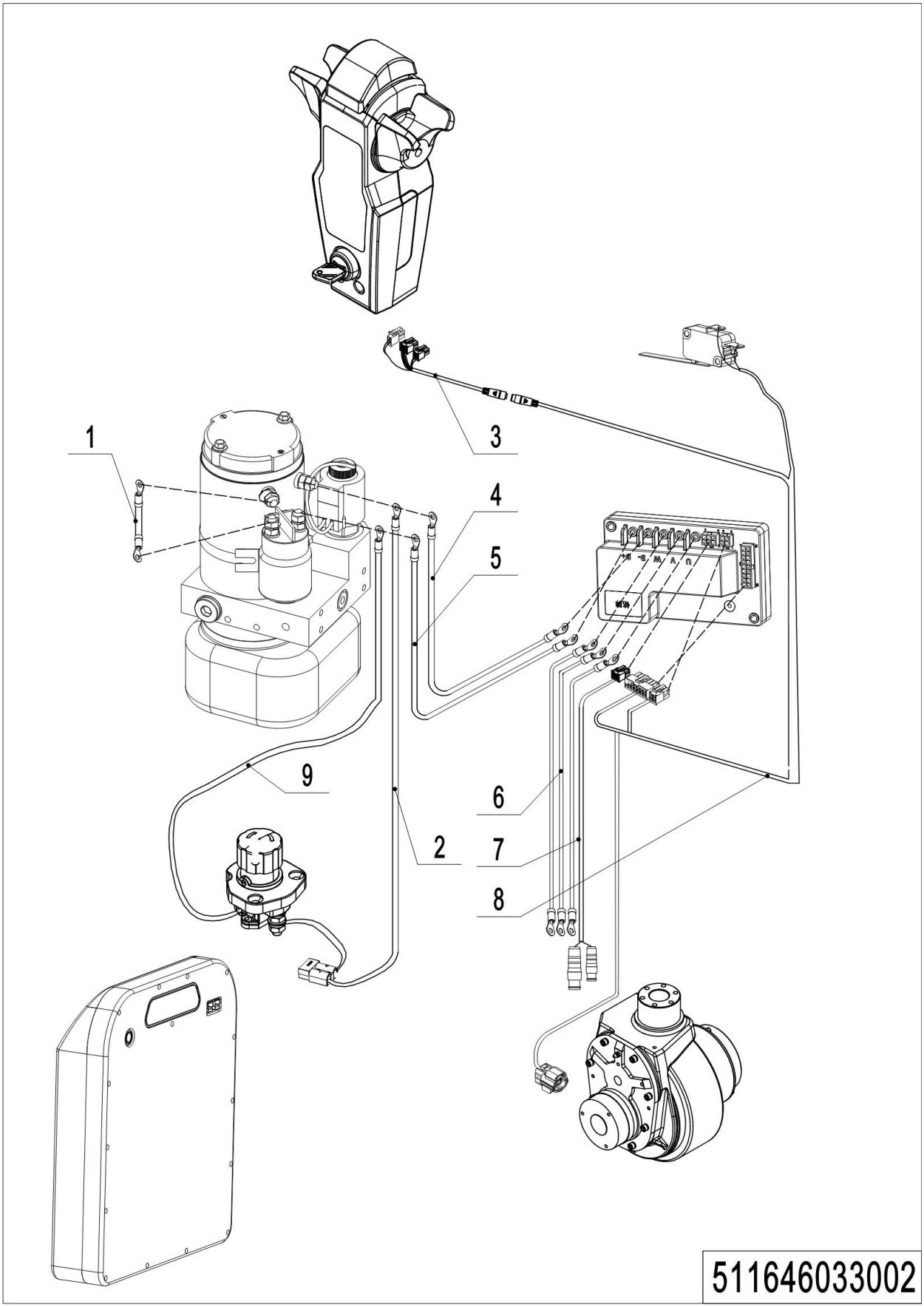

1= Supply as package. 2= Supply with constraints. 3= Phasing-out supply. 4= Supply as assembly. 5= Check other tables.

02 Wire Harness Type B (511646033002)

No.	Item Code	Mark	Item Description	Qty.	Substitute	Note
1	509933010012		Cables	1		
2	511633010010		Wire Harness	1		
3	511833010022		Wire Harness	1		
4	511633010003		Cables	1		B-
5	511633010011		Cables	1		B+
6	511633010004		Wire Harness	1		
7	511633010005		Wire Harness	1		
8	511633010015		Wire Harness	1		
9	511833010018		Cables	1		

03 Electronic Components Type A (511646033003)

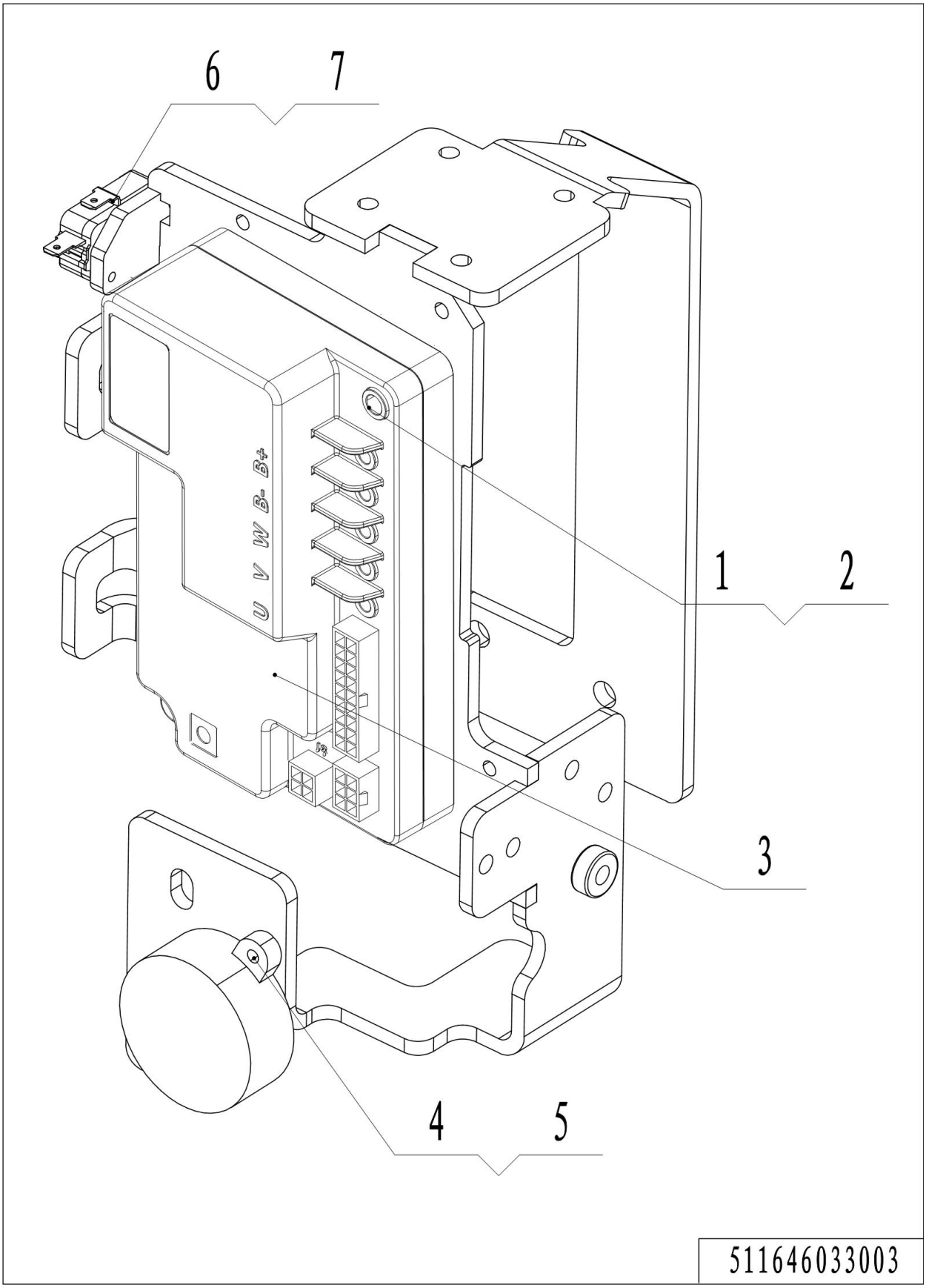

1= Supply as package. 2= Supply with constraints. 3= Phasing-out supply. 4= Supply as assembly. 5= Check other tables.

03 Controller Type A (511646033003)

No.	Item Code	Mark	Item Description	Qty.	Substitute	Note
1	910200200025	1	Screw	2		
2	910400500004	1	Spring Washer	2		
3	921400100227		Controller	1		
4	910200300002	1	Screw	2		
5	509998520063		Horn	1		
6	910200200004	1	Screw	2		
7	920200300012		Microswitch	1		

04 Electronic Components Type B (511646033004)

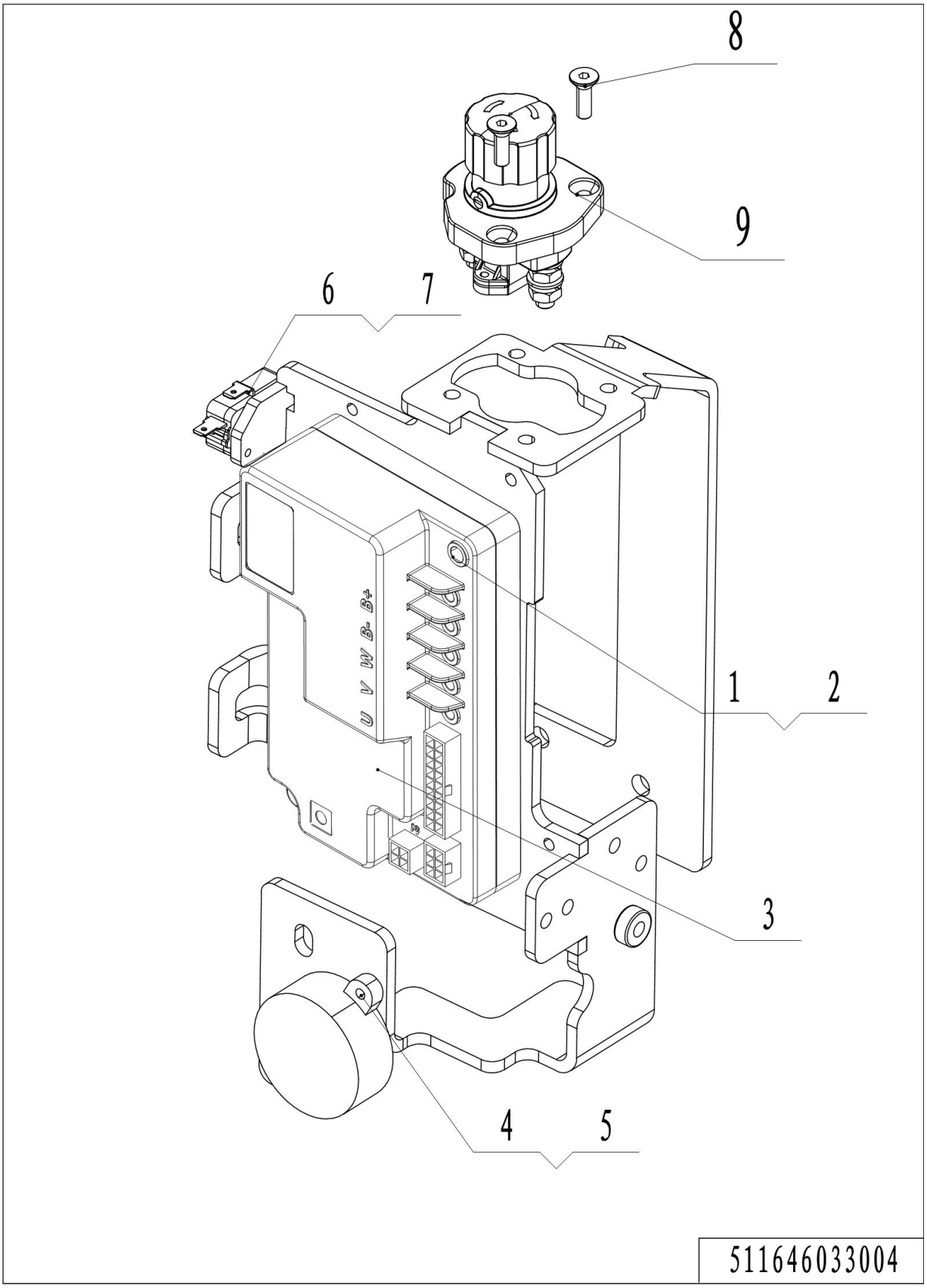

1= Supply as package. 2= Supply with constraints. 3= Phasing-out supply. 4= Supply as assembly. 5= Check other tables.

04 Controller Type B (511646033004)

No.	Item Code	Mark	Item Description	Qty.	Substitute	Note
1	910200200025	1	Screw	2		
2	910400500004	1	Spring Washer	2		
3	921400100227		Controller	1		
4	910200300002	1	Screw	2		
5	509998520063		Horn	1		
6	910200200004	1	Screw	2		
7	920200300012		Microswitch	1		
8	910200400010		Screw	2		
9	920200100027		Emergency Button	1		

05 Charger (511646036501)

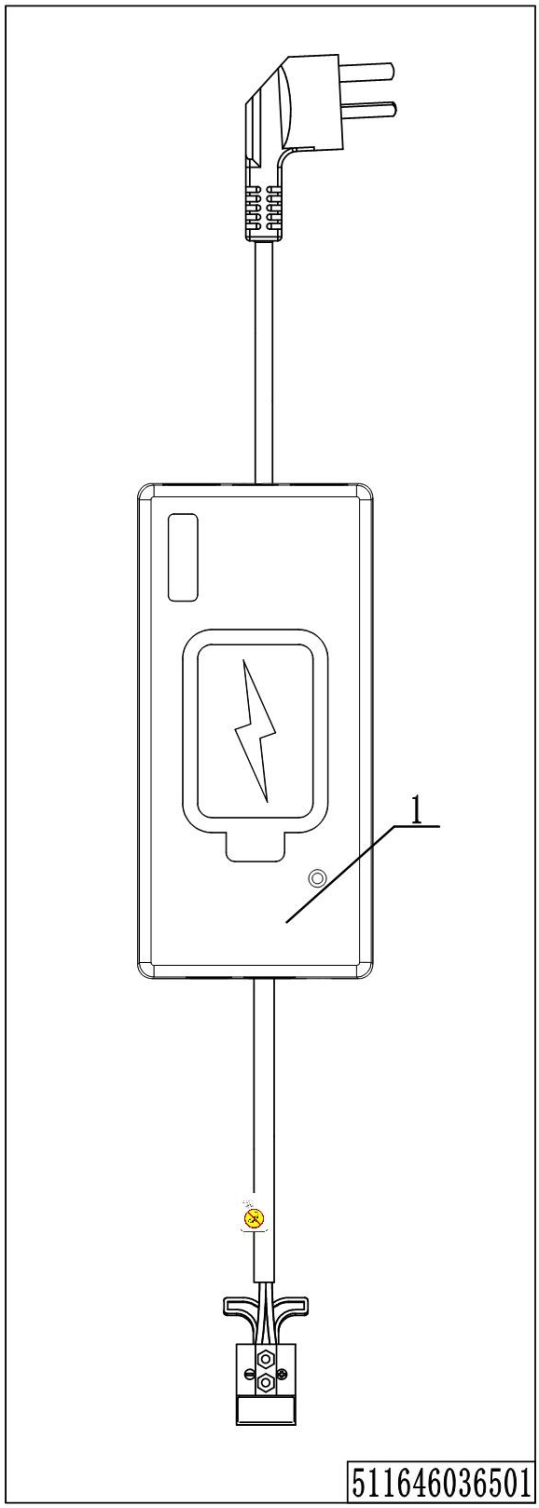

1= Supply as package. 2= Supply with constraints. 3= Phasing-out supply. 4= Supply as assembly. 5= Check other tables.

05 Charger (511646036501)

No.	Item Code	Mark	Item Description	Qty.	Substitute	Note
1	921000201011		Charger 48V5A (Aisa-CHN)	1		SW，Blue，220V
1	921000201012		Charger 48V5A (Aisa-ENG)	1		SW，Blue，220V
1	921000201013		Charger 48V5A (EU)	1		SW，Blue，220V
1	921000201095		Charger 48V5A (US)	1		SW，Blue，110V

06 Traction Battery (511646037001)

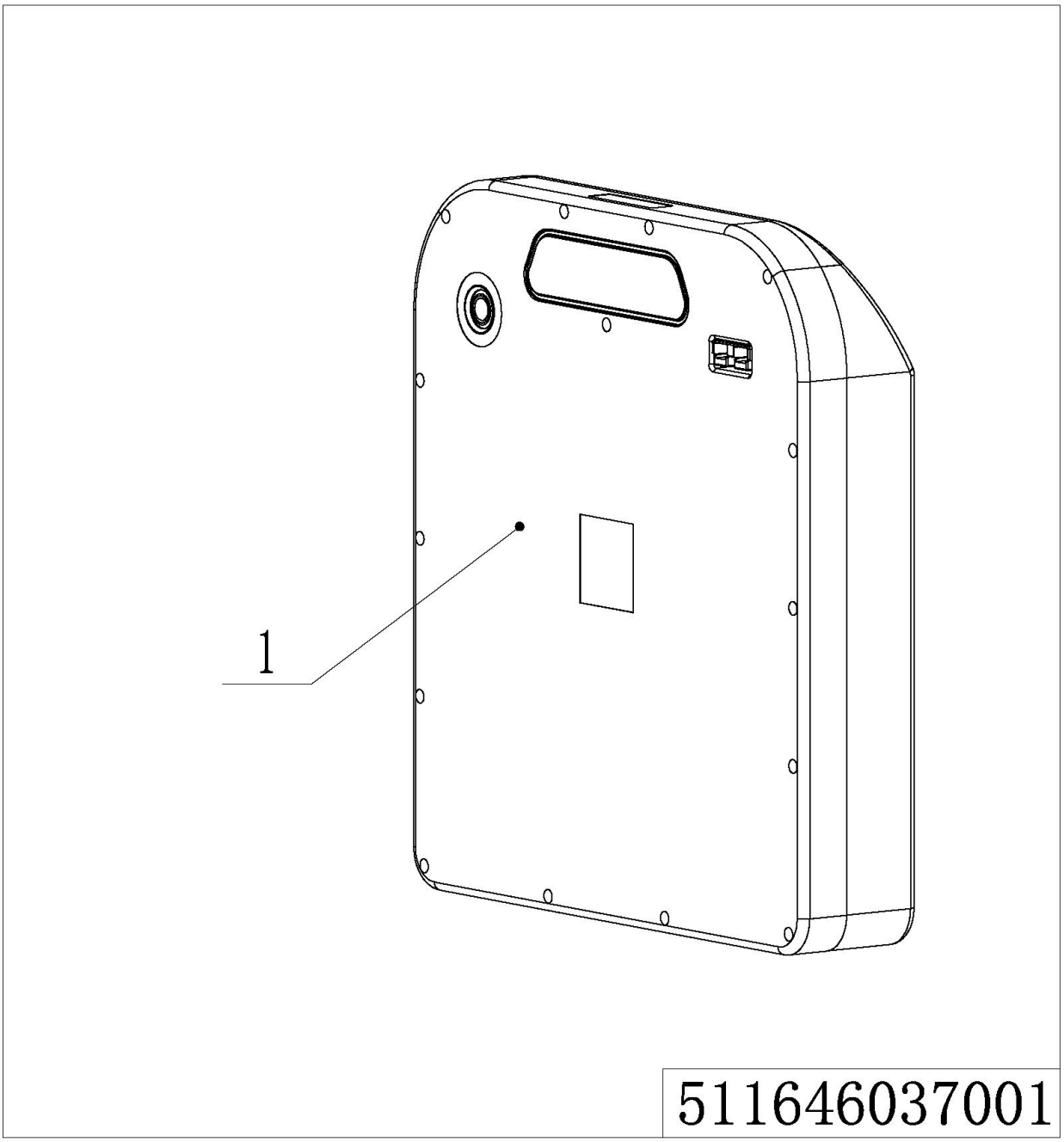

1= Supply as package. 2= Supply with constraints. 3= Phasing-out supply. 4= Supply as assembly. 5= Check other tables.

06 Traction Battery (511646037001)

No.	Item Code	Mark	Item Description	Qty.	Substitute	Note
1	920600100774		Li Battery48V20Ah	1		
1	920600101026		Li Battery48V30Ah	1		

Chapter 6: Others

01 Labels and Decals-EU (511646047003)

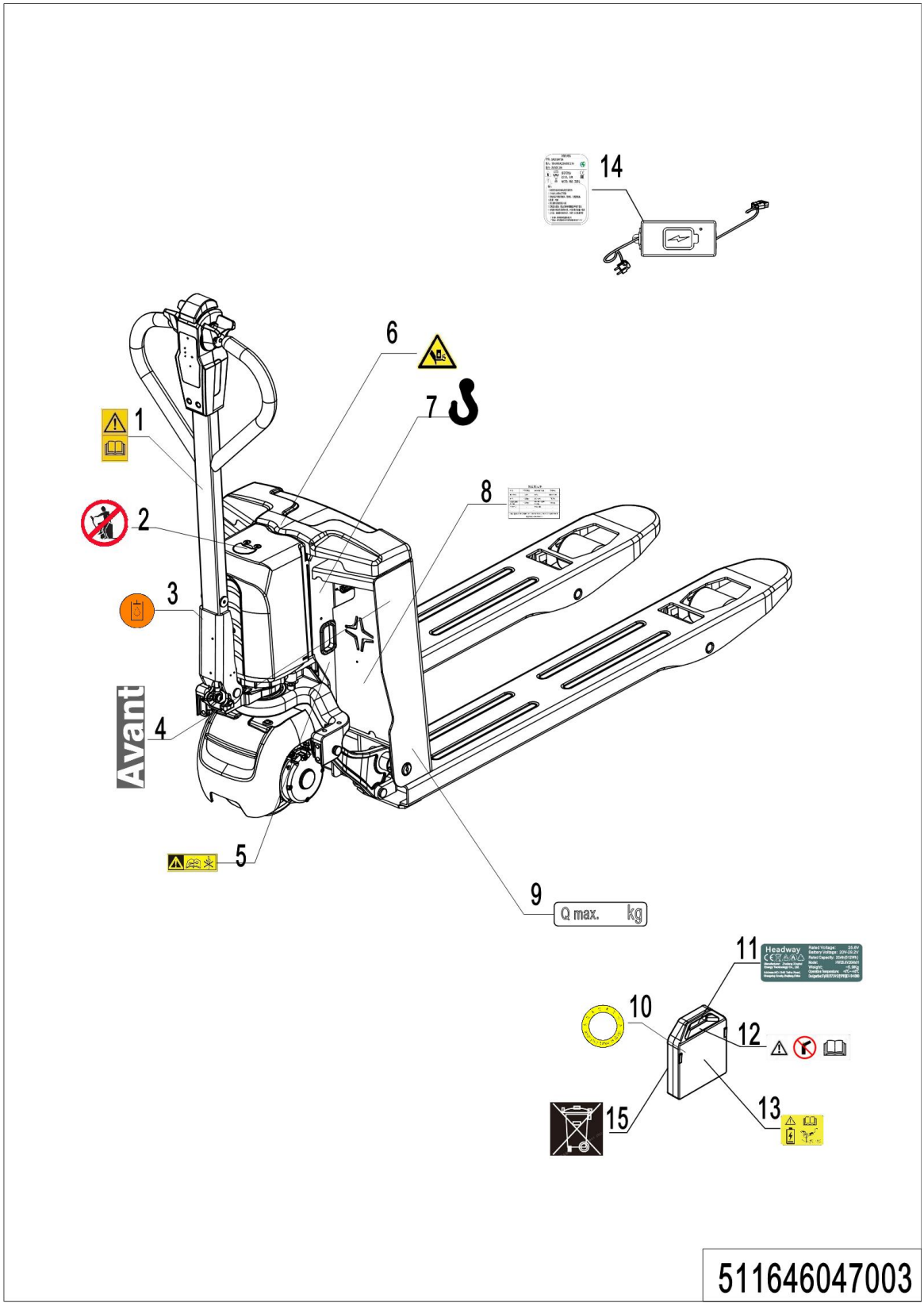

1= Supply as package. 2= Supply with constraints. 3= Phasing-out supply. 4= Supply as assembly. 5= Check other tables.

01 Labels and Decals-EU (511646047003)

No.	Item Code	Mark	Item Description	Qty.	Substitute	Note
1	941200300002		Label	1		
2	941200100003		Label	1		
3	941200300003		Label	1		
4	511847020000		Label	1		
5	941200200009		Label	2		
6	508047020007		Label	1		
7	941200300001		Label	2		
8	509947520000		Truck data plate	1		
9	941200200009		Label	2		
10	509947020002		Label	1		
11	509947020003		Label	1		
12	508047020002		Label	1		
13	509947020004		Label	1		
14	509947020005		Lable	1		
15	508047020015		Label	1		

02 Labels and Decals-US (511646047004)

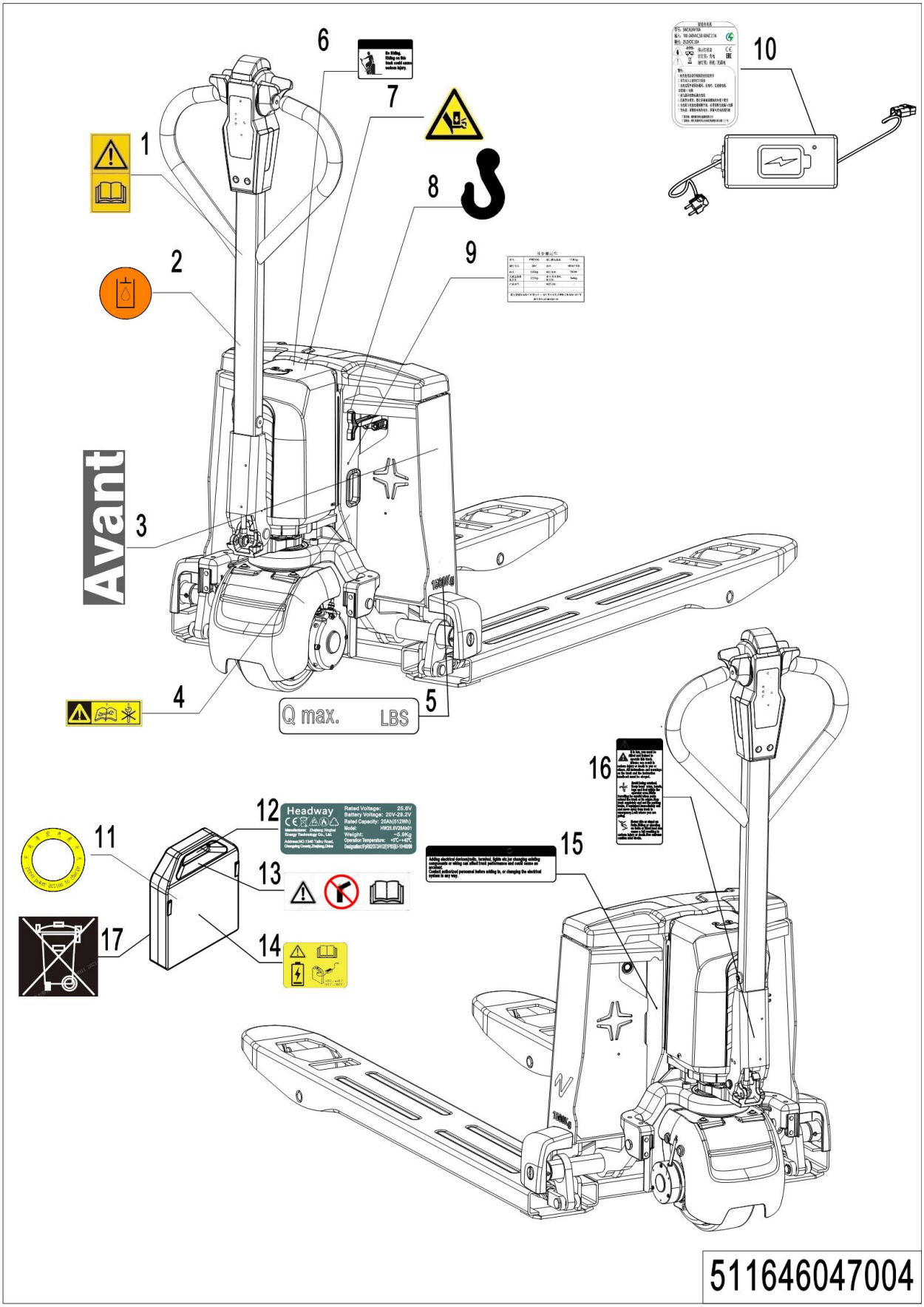

1= Supply as package. 2= Supply with constraints. 3= Phasing-out supply. 4= Supply as assembly. 5= Check other tables.

02 Labels and Decals-US(511646047004)

No.	Item Code	Mark	Item Description	Qty.	Substitute	Note
1	941200300002		Label	1		
2	941200300003		Label	1		
3	511847020000		Label	1		
4	508047020004		Label	2		
5	941200200009		Label	2		
6	941200100011		Label	1		
7	508047020007		Label	1		
8	941200300001		Label	2		
9	509947520000		Truck data plate	1		
10	509947020005		Lable	1		
11	509947020002		Label	1		
12	509947020003		Label	1		
13	508047020002		Label	1		
14	509947020004		Label	1		
15	941200100010		Label	1		
16	941200100009		Label	1		
17	508047020015		Label	1		

03 Labels and Decals-EU Type B (511646047005)

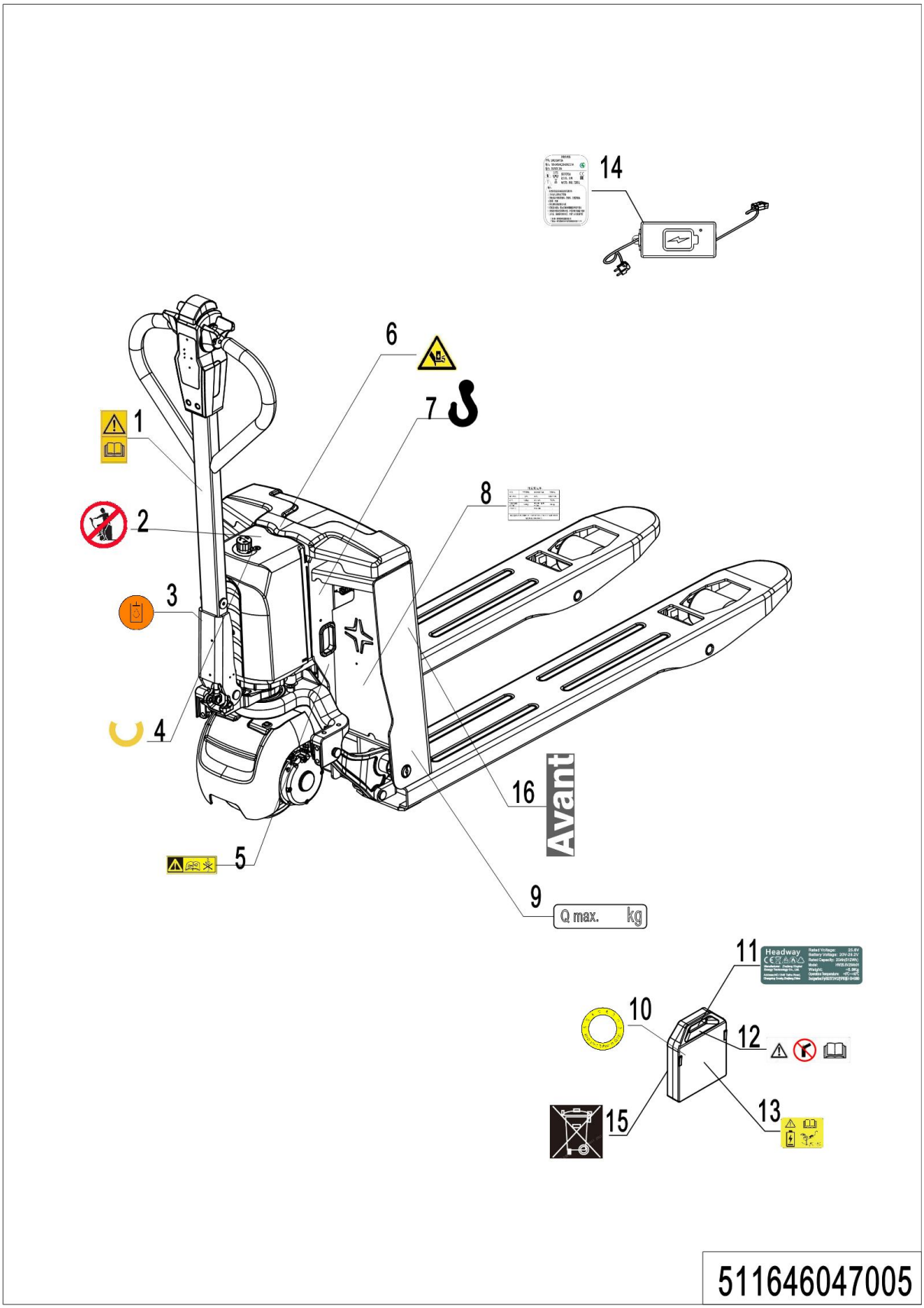

03 Labels and Decals-EU Type B(511646047005)

No.	Item Code	Mark	Item Description	Qty.	Substitute	Note
1	941200300002		Label	1		
2	941200100003		Label	1		
3	941200300003		Label	1		
4	509947020000		Label	1		
5	941200200009		Label	2		
6	508047020007		Label	1		
7	941200300001		Label	2		
8	509947520000		Truck data plate	1		
9	941200200009		Label	2		
10	509947020002		Label	1		
11	509947020003		Label	1		
12	508047020002		Label	1		
13	509947020004		Label	1		
14	509947020005		Lable	1		
15	508047020015		Label	1		
16	511847020000		Label	1		

04 Labels and Decals-US Type B (511646047006)

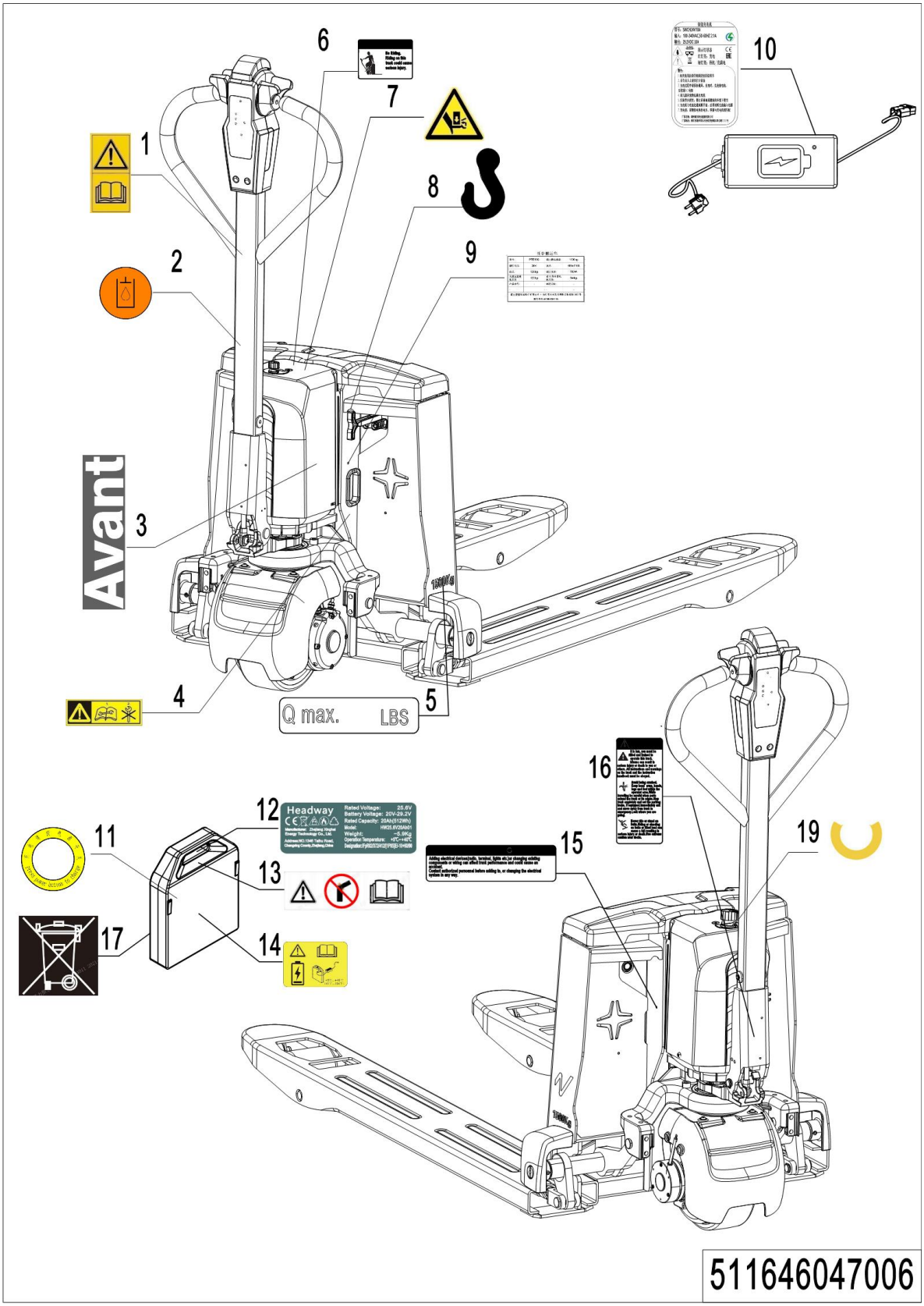

04 Labels and Decals-US Type B(511646047006)

No.	Item Code	Mark	Item Description	Qty.	Substitute	Note
1	941200300002		Label	1		
2	941200300003		Label	1		
3	511847020000		Label	1		
4	508047020004		Label	2		
5	941200200009		Label	2		
6	941200100011		Label	1		
7	508047020007		Label	1		
8	941200300001		Label	2		
9	509947520000		Truck data plate	1		
10	509947020005		Lable	1		
11	509947020002		Label	1		
12	509947020003		Label	1		
13	508047020002		Label	1		
14	509947020004		Label	1		
15	941200100010		Label	1		
16	941200100009		Label	1		
17	508047020015		Label	1		
18	509947020000		Label	1		

Appendix

01 Electrical Circuit Diagram Type A (511646045501)

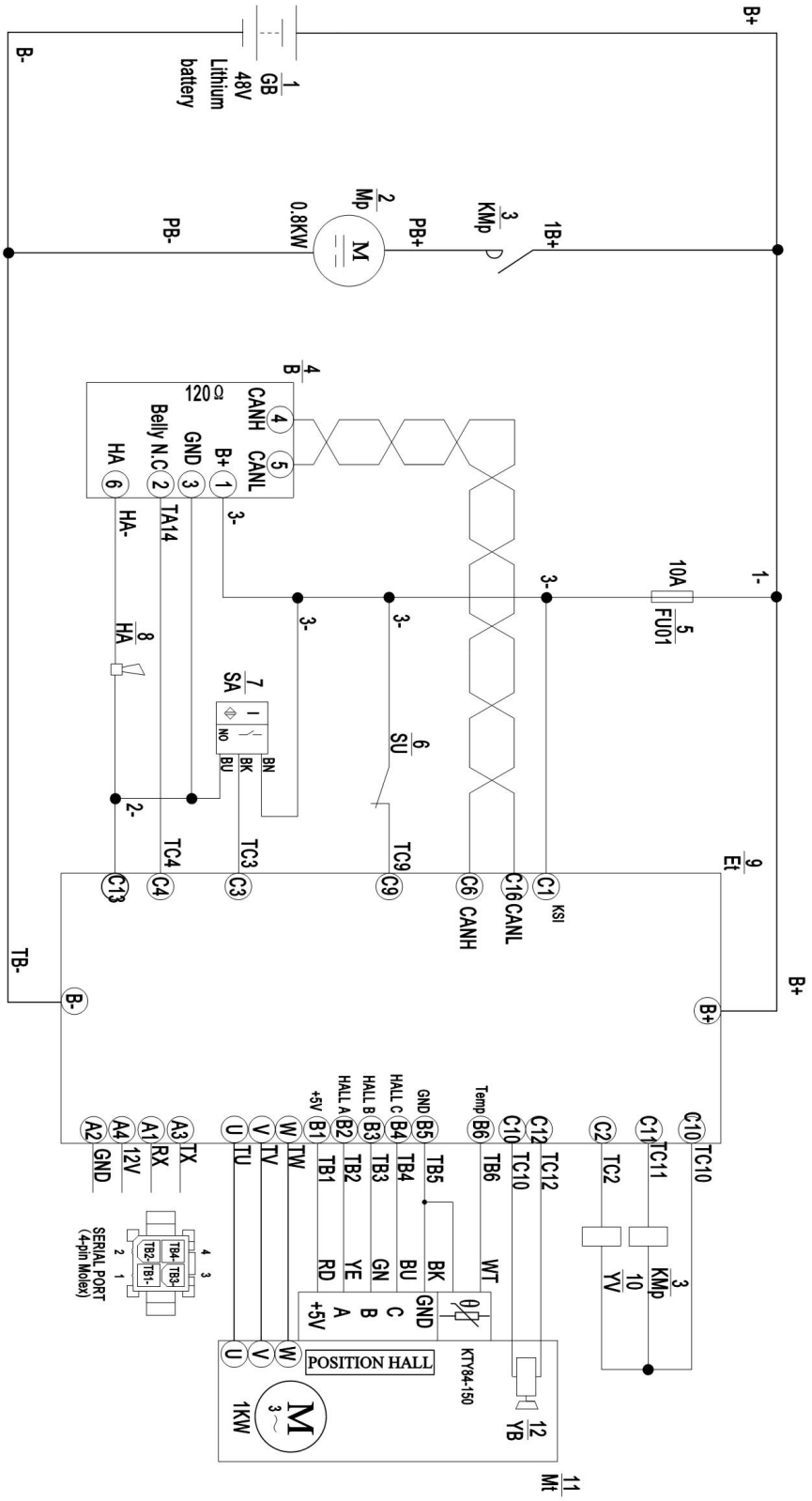

1= Supply as package. 2= Supply with constraints. 3= Phasing-out supply. 4= Supply as assembly. 5= Check other tables.

02 Electrical Circuit Diagram Type B (511646045502)

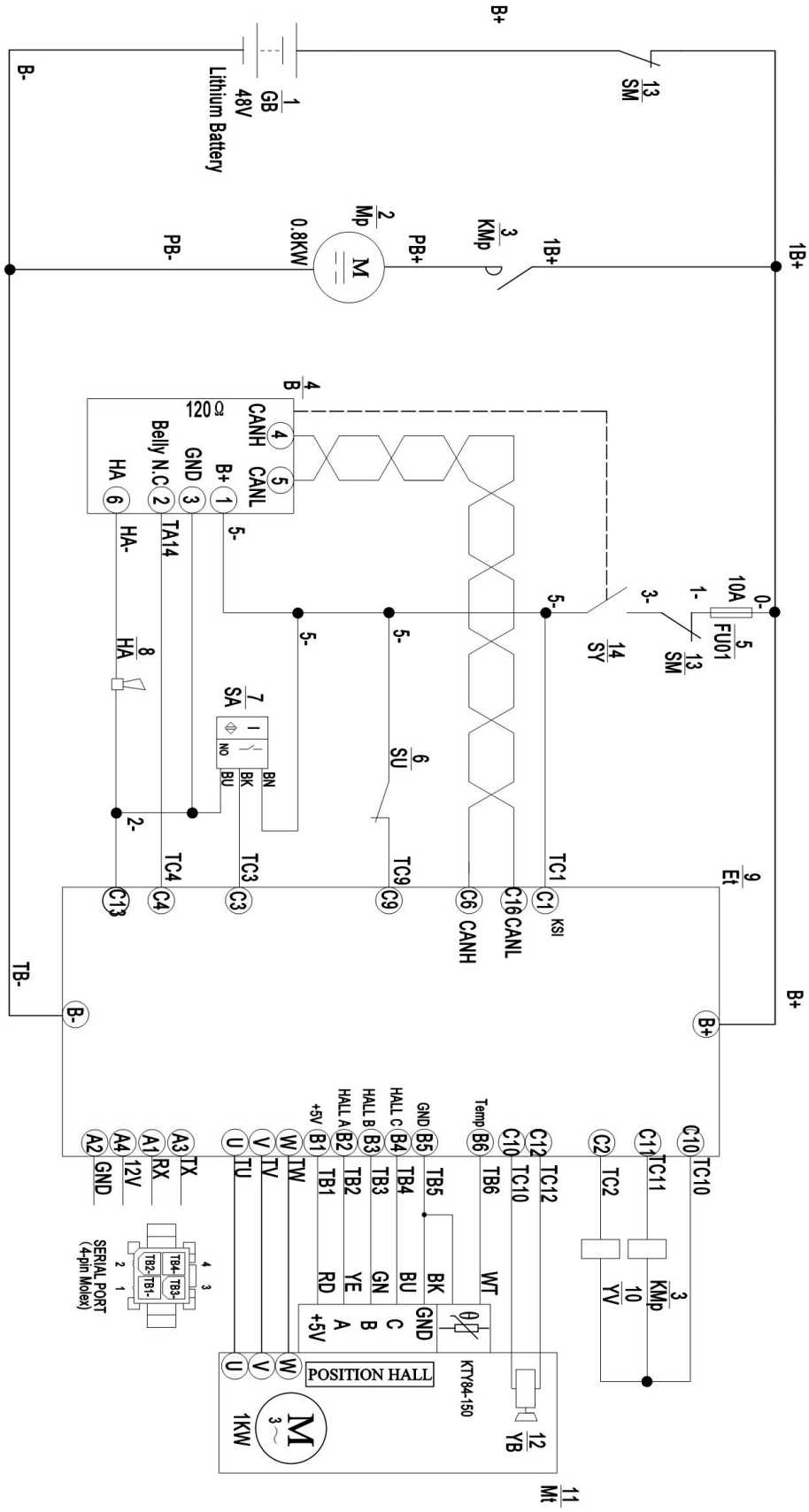

1= Supply as package. 2= Supply with constraints. 3= Phasing-out supply. 4= Supply as assembly. 5= Check other tables.

03 Electrical Circuit Diagram (508046045502)

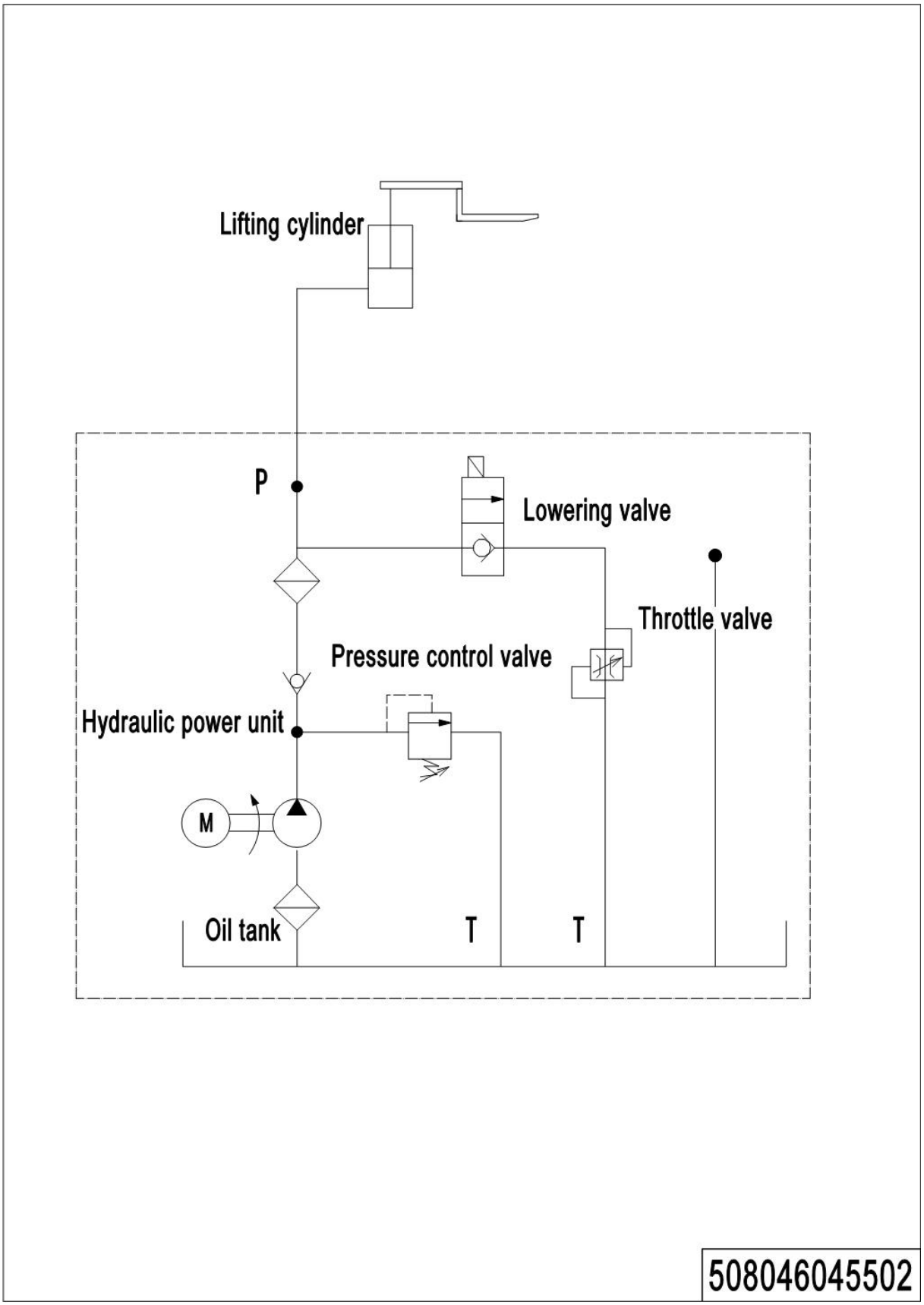

1= Supply as package. 2= Supply with constraints. 3= Phasing-out supply. 4= Supply as assembly. 5= Check other tables.

04 Consumable Parts List

No.	Item Code	Item Description	Qty.	Chapter/ Section/ Number
1	910700200058	Bearing	1	Chapter 1/01/3
2	910700600044	Bearing	1	Chapter 1/01/6
3	509924010005	Seal Kit	1	Chapter 2/01/10.01
4	509924010004	Seal Kit	1	Chapter 2/01/10.03
5	940500100097	Bushing	2	Chapter 3/01/15 Chapter 3/02/15
6	940500100083	Bushing	8	Chapter 3/01/7 Chapter 3/02/7
7	940500200001	Bushing	2	Chapter 4/01/08 Chapter 4/02/08
8	511811020001	Gas Spring	1	Chapter 4/01/12.3Chapter 4/02/12.3
9	940500200038	Bushing	4	Chapter 4/03/2.01
10	910700200019	Bearing	8/4	Chapter 4/04/2.04
11	511817020002	WheelΦ80x60	4	Chapter 4/04/2.05
12	940500100088	Bushing	4	Chapter 4/03/2.08
13	511817020004	WheelΦ80x83	2	Chapter 4/03/3.01
14	910700200018	Bearing	4	Chapter 4/05/6.01
15	940300300017	WheelΦ80x30	2	Chapter 4/05/4.02
16	920100200010	Fuse10A-1	1	

1= Supply as package. 2= Supply with constraints. 3= Phasing-out supply. 4= Supply as assembly. 5= Check other tables.