Cordless Rotary Hammer
Item No : DRH-101

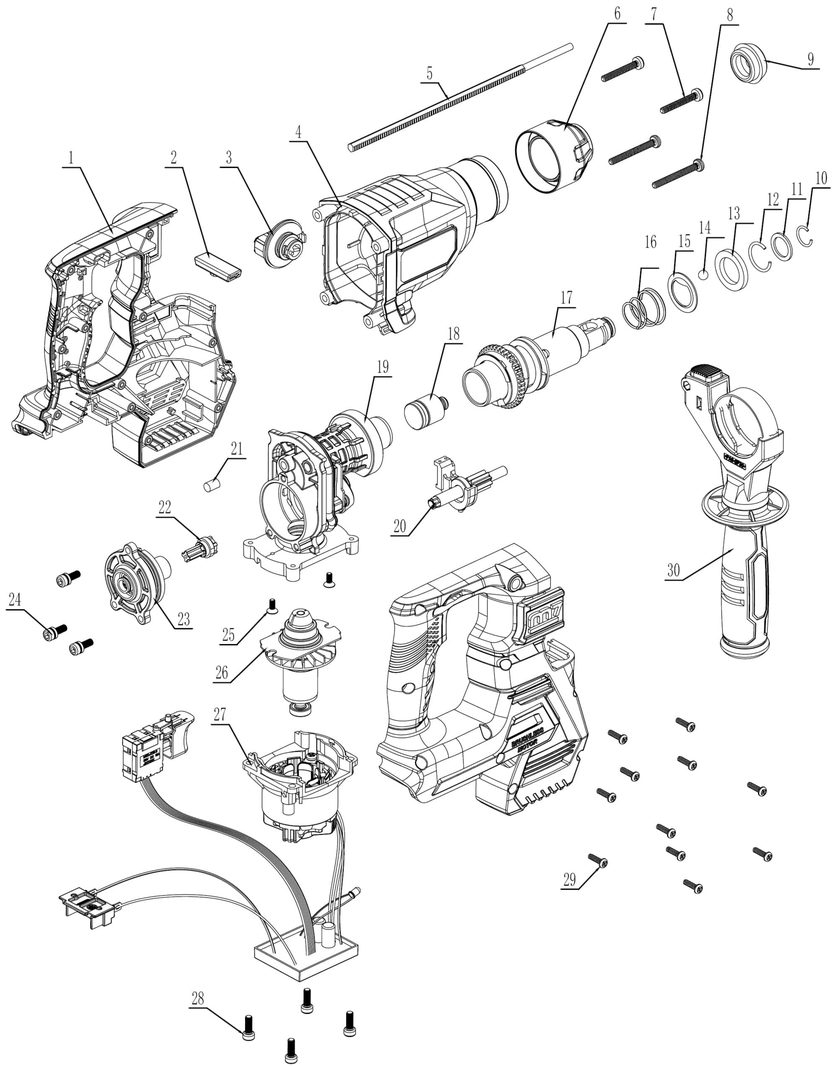

Part List DRH-101

NO.	INDEX NO.	DESCRIPTION	Q'TY
1	DRH-101K01	housing set	1
2	DRH-101P02	Forward and reverse dial buttons	1
3	DRH-101P03	fucntion knob set	1
4	DRH-101P04	plastic housing set	1
5	DRH-101P05	stop depth	1
6	DRH-101P06	ball holder	1
7	DRH-101T07	screw	1 SET
8	DRH-101T08	screw	1 SET
9	DRH-101P09	rubber head	1
10	DRH-101P10	Ring	1
11	DRH-101P11	Washer	1
12	DRH-101P12	Ring	1
13	DRH-101P13	Ring	1
14	DRH-101P14	Ball	1
15	DRH-101P15	steel ring	1
16	DRH-101P16	Tower spring	1
17	DRH-101P17	cylinder set	1
18	DRH-101P18	impact bolt	1
19	DRH-101P19	aluminum holder	1
20	DRH-101P20	spline shaft set	1
21	DRH-101P21	wool	1
22	DRH-101P22	small gear	1
23	DRH-101P23	aluminum back holder set	1
24	DRH-101T24	Hex screw	1 SET
25	DRH-101T25	Hex screw	1 SET
26	DRH-101T26	Armature set	1
27	DRH-101P27	Stator set	1
28	DRH-101T28	Hex screw	1 SET
29	DRH-101T29		1 SET
30	DRH-101P30	Side handle set	1