OWNER'S MANUAL

HYDRAULIC SHOP PRESS
PRESSE D'ATELIER HYDRAULIQUE
PRENSA HIDRÁULICA DE TALLER
HYDRAULISCHE PRESS
МАГАЗИН ПРЕССЫ

Item: TY50001
Capacity: 50 Ton

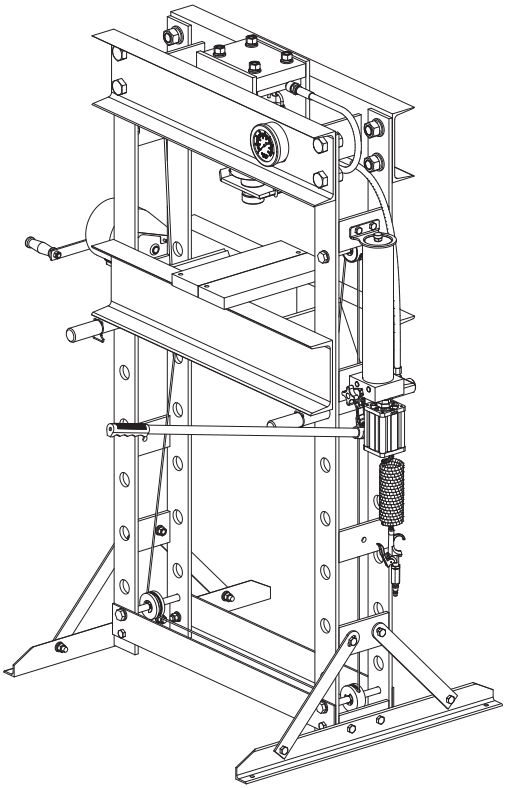

⚠ WARNING!

Read carefully and understand all ASSEMBLY AND OPERATION INSTRUCTIONS before operating. Failure to follow the safety rules and other basic safety precautions may result in serious personal injury.

TECHNICAL SPECIFICATIONS

	Description
Item	TY50001
Capacity	50 TON
Bed Opening	175mm
Work Range	0～890mm
Stroke Length	175mm
Inside Bed Dimensions L x W	175×690mm
Dimensions L x W x H	1190×800×1660mm

SAFETY MARKINGS

⚠ WARNING!

1. Study, understand, and follow all instructions before operating the device.
2. Do not exceed rated capacity.
3. Prior to use, make sure the press is securely anchored.
4. The press shall be installed and operated in accordance with instructions.
5. Ensure the work area is clean and free of any hazards before operation.
6. Keep hands, arms, feet, and legs out of the work area. Accidental slippage can result in personal injury.
7. Use appropriate guarding to contain any pieces that may break or fly apart when applying force.
8. Use only press accessories having a capacity rating equal to or greater than the capacity of the press.
9. Verify lift cables are slack before pressing on the bolster.
10. Avoid off-center loads.
11. No alterations shall be made to the product.
12. Do not use this press for any use other than the manufacturer specified usage.
13. Failure to heed and understand these instructions and markings may result in personal injury, property damage, or both.

PARTS LIST

SHOP PRESS PARTS LIST (figure a)

No.	Description	QTY
1	Nut M16	4
2	Lock Washer 16	4
3	Washer 16	4
4	Bolt M16×75	4
5	Angle Connector	2
6	O-ring 5×1.8	3
7	Vitta For Pressure Cabin	1
8	Valve	1
9	Bolt M10×30	4
10	Washer 10	4
11	Lock Washer 10	4
12	Nut M10	4
13	Hydraulic Air Pump	1
14	Handle	1
15	Handle Cover	1
16	Bolt M12×35	16

No.	Description	QTY
17	Washer 12	16
18	Lock Washer 12	16
19	Nut M12	16
20	Side Support Rails	4
21	Base Support Section	2
22	Lower Roller Shaft	2
23	Washer 16	6
24	Nut M16	3
25	Stretch Circle	6
26	Roller Shield	1
27	Wheel	3
28	Roller Shield	1
29	Hydraulic Hose	1
30	Roller Shaft	1
31	Bolt M12×30	1
32	Lock Washer 12	1

SHOP PRESS PARTS LIST (a)

No.	Description	QTY
33	Washer 12	1
34	Gauge Connection Nut	1
35	Connection Nut	1
36	Rectangular Ring	1
37	Gauge Retainning Tee	1
38	Big Roller Shaft	1
39	Big Wheel	1
40	Stretch Circle	2
41	Washer 24	1
42	Nut M24	1
43	Upper Crossbeam	1
44	Winch	1
45	L-bracket	1
46	Bed Frame Pin	2
47	Spring Clip	2
48	Left Frame	1
49	Bolt M10×30	5
50	Washer 10	5
51	Lock Washer 10	5
52	Nut M10	5

No.	Description	QTY
53	Bolt M24×50	6
54	Washer 24	6
55	Lock Washer 24	6
56	Nut M24	6
57	Pressure Gauge	1
58	Ram	1
59	Bolster Plate	1
60	Bed Frame	1
61	Right Frame	1
62	Cross Member	1
63	Wire Clamp	2

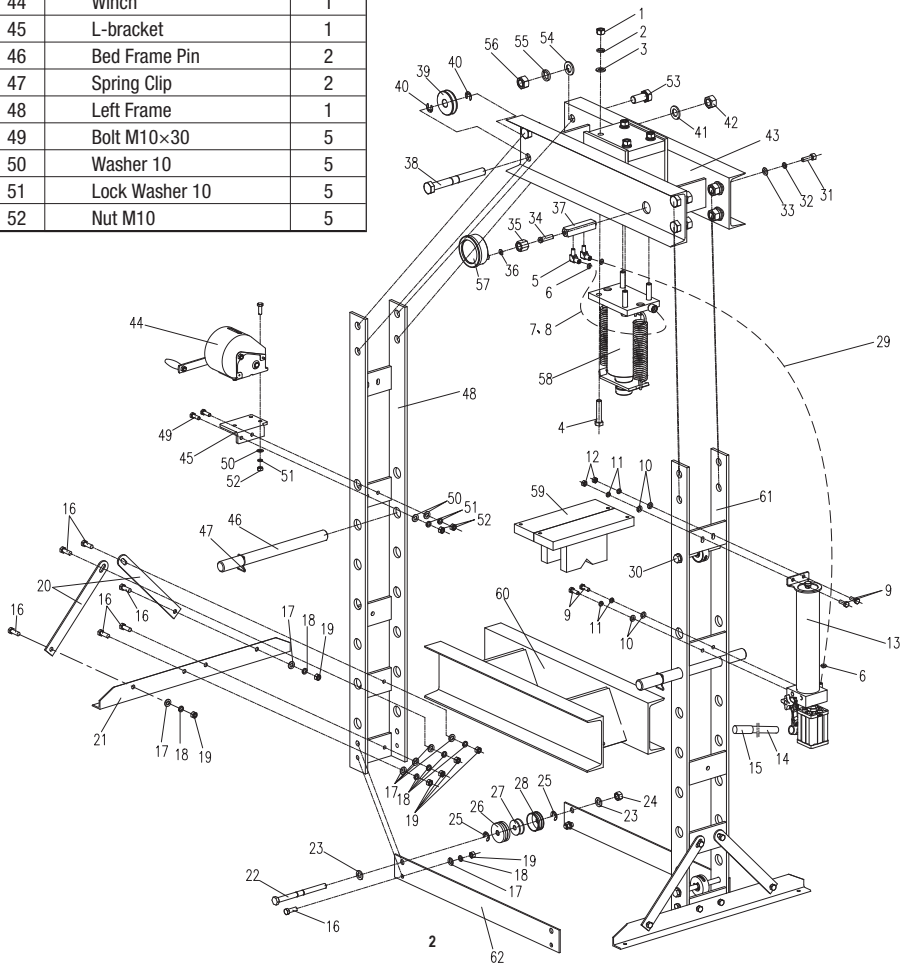

RAM PARTS LIST (b)

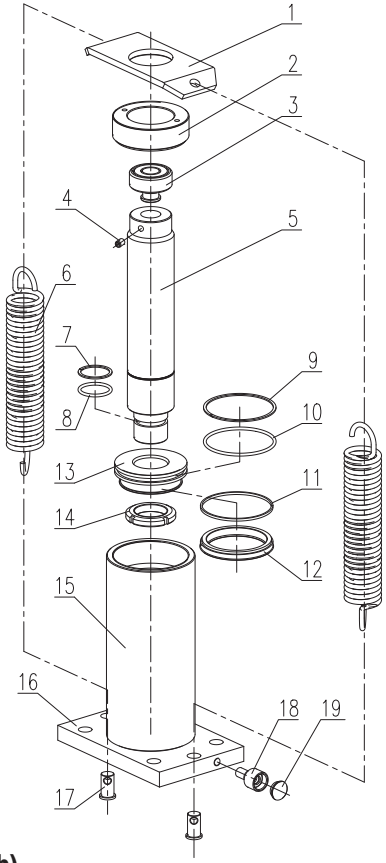

RAM PARTS LIST (figure b)

No.	Description	QTY
1	Spring Hunger	1
2	Bushing	1
3	Coping	1
4	Bolt M8×12	1
5	Piston Rod	1
6	Spring	2
7	Back Ring	1
8	O-ring 35.5×3.55g	1
9	Nylon Ring	1
10	O-ring	1

No.	Description	QTY
11	Ring	1
12	Y-ring	1
13	Piston Head	1
14	Nut M42×1.5	1
15	Cylinder Assembly	1
16	Soleplate	1
17	Extension Spring Bolt	2
18	Coupling	1
19	Dust Cap	1

PUMP PARTS LIST (C)

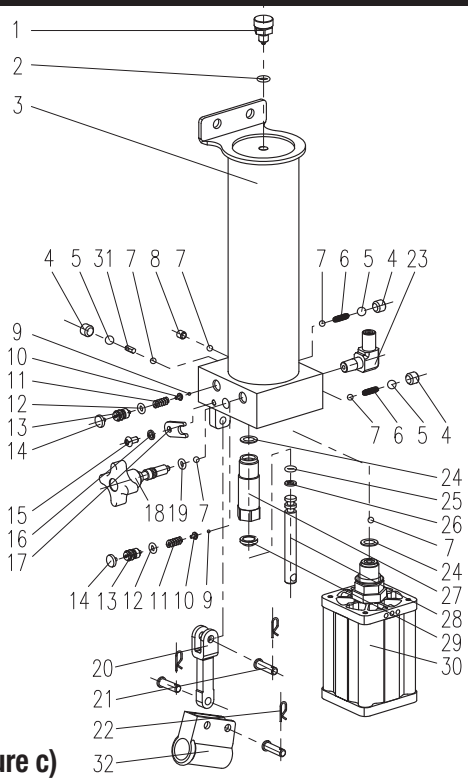

PUMP PARTS LIST (figure c)

No.	Description	QTY
1	Air bleed screw	1
2	O-ring	1
3	Hydraulic pump unit	1
4	M12X1.25X10	3
5	Ball valve	3
6	Steel ball Spring	2
7	Ball valve	5
8	M8x8	1
9	Ball valve	2
10	Spring plate	2
11	Spring safety valve	2
12	O-ring	2
13	Pressure adjusting screw	2
14	Safety valve cap	2
15	Bolt M6X10	1
16	Spring washer6	1

No.	Description	QTY
17	Limit block	1
18	Release valve lever	1
19	O-ring	1
20	connecting rod	1
21	Pin	3
22	Torsional spring latch	3
23	Angle coupling	1
24	Copper pad	2
25	O-ring	1
26	Ring	2
27	Pump body	1
28	Pump unit	1
29	J-ring	1
30	Air pump	1
31	Steel ball pin	1
32	Hand-held	1

ASSEMBLY INSTRUCTIONS

Use the exploded drawing as your guide to assemble. Lay all parts and assemblies out in front of you before beginning. The following procedure is recommended:

- Attach the two base support sections (21) and the cross member runner rails (62) to the frame (48) with bolt (16), washer (17), spring washer (18) and nuts (19).
- Attach side support rails (20) to base support sections (21) and frame (48) with bolt (16), washer (17), spring washer (18) and nuts (19).
- Attach the hydraulic air pump (13) to the right frame (61) with washer (10) spring washer (11) and bolt (9). Ensure that the hydraulic air pump (13) is securely installed.
  Note: DO NOT drop hydraulic air pump during installation. Pump could be damaged if dropped or unsecured! Check that pump is secure before releasing your hold of the hydraulic air pump.
- Locate the hydraulic hose connection points on for cylinder and hydraulic air pump. Then connect the hydraulic hose to ram (58), then connect the hose fitting (29) to the hydraulic air pump.
- Attach the L-bracket (45) to the left frame (48) with spring washer (51), washer (50), bolt (49) and nut (52).
- Then install winch (44) to the L-bracket (45) with spring washer (51), washer (50), bolt (49) and nut (52).
- Rotating the winch handle into the down position.
- Raise the joined press bed frame (60) to the desired height and insert the bed frame pins (46) into the holes on the frames (48). Secure the pins (46) with spring clips (47).
  CAUTION: Press bed frame is heavy and could cause a potential hazard. Raise press bed frame with 2 or more people.
- Place the bolster plates (59) on bed frame (60).
- Insert the handle (14) into handle sleeve of the hydraulic pressure pump (13). Check for proper pump action.
- Verify that all bolts and screws have been tightened.
- The press is now ready for use.

BEFORE FIRST USE

- Before first use of this product, purge away air from the hydraulic system: open the release valve by turning it counterclockwise. Pump several full strokes to eliminate any air in the system.
- Check all parts and conditions, if there is any part broken, stop using it and contact your supplier immediately.

OPERATING INSTRUCTIONS

WARNING! ENSURE THAT YOU READ, UNDERSTAND AND APPLY THE SAFETY NSTRUCTIONS AND WARNINGS BEFORE USE.

- Place the heel block on bed frame, then insert workpiece onto the heel block.
- Connect the air inlet fitting into the shop air supply hose lock fitting, turn on the valve to let the pump work until serrated saddle nears workpiece, then turn off the air valve. When air source is unavailable, pump the handle until serrated saddle nears workpiece.
- Align workpiece and ram to ensure center-loading.
- Turn on air valve (or pump the handle) to apply load onto workpiece.
- When work is done, turn off the air valve (or stop pumping handle), slowly and carefully remove load from workpiece by turning the release valve counterclockwise in small increments.
- Once ram has fully retracted, remove workpiece from bed frame
- Disconnect the air inlet fitting from the air source.

MAINTENANCE

- Clean the outside of the press with dry, clean and soft cloth and periodically lubricate the joints and all moving parts with a light oil as needed.
- When not in use, store the press in a dry location with ram and piston fully retracted.
- When press efficiency drops, purge always air from hydraulic system as described before.
- Check the hydraulic oil; remove the oil filler nut on the top of the reservoir, if the oil is not adequate, fill with high quality hydraulic jack oil as necessary, then replace the oil filler nut, purge away air from the hydraulic system.

EU Declaration of Conformity (Translation of the original EU Declaration of Conformity)

We
Changshu Tongrun Auto Accessory Co., Ltd
New Longteng Industrial Park
Changshu Economic Development Zone
215500 Changshu City, Jiangsu Prov.
PEOPLE'S REPUBLIC OF CHINA
Tel: +86-512-52343388
wangjf@tongrunjacks.com

Declare under our sole responsibility that the follow product

Equipment: shop press
Brand name: Big Red
Model/type: TY50001
Is in conformity with the
Machinery Directive (MD) 2006/42/EC
And the following harmonized standards and technical specifications have been applied:

EN ISO 12100:2010 Safety of machinery-General principles for design - Risk assessment and risk reduction
EN 1494:2000+A1:2008 Mobile or movable jacks and associated lifting equipment

Changshu 30.03.2018
Manufacturer: Changshu Tongrun Auto Accessory Co., Ltd

Wang Jingfang

Jingfang Wang, Engineer (authorized to compile the Technical File)

Torin BIG RED JACKS

Made in china